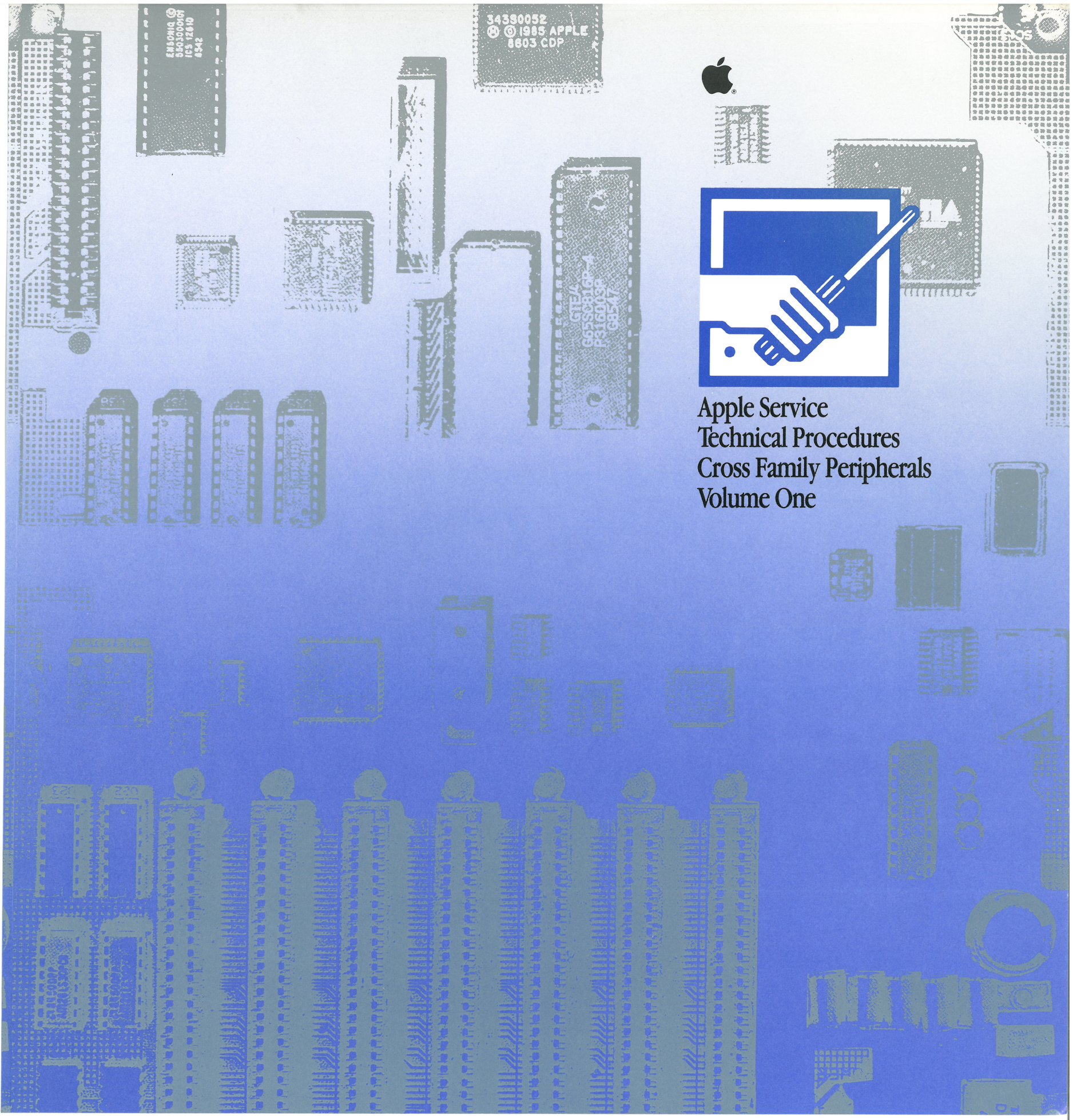

Apple Service Technical Procedures Cross Family Peripherals Volume One

Apple Technical Procedures

Cross Family Peripherals

Document Control

April 1991

TECHNICAL PROCEDURES FILING INSTRUCTIONS

	REMOVE PAGES	INSERT PAGES
CROSS FAMILY PERIPHERALS - VOLUME ONE		
VOLUME Table of Contents	2 pages	2 pages
Modems	i, 4.1, 4.5	i, 4.1, 4.5
SCSI Hard Disk Drives	i-iii, 1.3, 1.7 2.1-2.4, 2.9-2.12, IPL.1, IPL.7-IPL.11	i-iii, 1.3, 1.7 2.1-2.4, 2.9-2.12, IPL.1, IPL.7-IPL.13
CROSS FAMILY PERIPHERALS - VOLUME TWO		
VOLUME Table of Contents	1 page	1 page
ImageWriter	3.1-3.6	3.1-3.6
ImageWriter II	3.15	3.15
ImageWriter II/L	3.11	3.11

Please store this Document Control Sheet behind the Table of Contents at the front of the manual.

Note: All Technical Procedures changes are highlighted by a double line || in the outside margins.

Apple Service Technical Procedures Cross Family Peripherals

Volume One

PN: 072-0230
(Cross Family Not Sold Separately)

Copyright 1982-1989 by Apple Computer Inc. March, 1991

Apple Technical Procedures

Cross Family Peripherals
Volume One

Table of Contents

	--Title page (contains build date)	–
Modems	--Table of Contents	08/90
	--300/1200 Modems T/S & Take-Apart	01/84
	(except page 1.1)	10/85
	(except page 1.9)	02/85
	--Apple Personal Modem	04/87
	--Apple Data Modem 2400	08/89
	(except pages 3.1, 3.4, 3.5, 3.7, 3.8,)	04/90
	(except pages 3.9-3.12)	06/90
	(except page 3.13-3.15)	03/91
	--Diagnostics	04/90
	(except pages 4.5-4.9)	03/91
	--Illustrated Parts List	04/87
	(except page IPL.7)	12/87
	(except pages IPL.1, IPL.8, IPL.9)	08/89
You Oughta Know...	--Table of Contents	03/90
	--Technical Procedures	07/90
	--AppleLink	07/90
	--Keyswitch Replacement	09/85
	--Diagnostic Duplication	07/90
	(except pages 3.1, 3.9, 3.10)	03/87
	(except pages 3.2, 3.5, 3.6, 3.7, 3.8)	03/86
	--Apple Module Symptom Codes	07/90
	--Electrostatic Discharge	03/87
	--Mouse Preventive Maintenance	07/88
	--CRT Safety	03/90
	(except pages 8.4, 8.6)	06/90
	--SIMM Removal Tool	07/90
Disk Drives	--Table of Contents	10/89
	--Drive Compatibility	10/89

Apple 3.5 Drive	--Table of Contents	10/88
	--Basics	10/86
	(except page 1.1)	10/88
	(except page 1.2)	02/90
	(except page 1.4)	12/88
	--Take-Apart	10/86
	(except page 2.10)	12/88
	--Diagnostics	10/86
	--Troubleshooting	10/86
	(except page 4.4)	05/88
	(except page 4.3)	11/89
	--Additional Procedures	05/88
	--Illustrated Parts List	10/88
	(except page IPL.2)	12/88
	(except page IPL.3)	08/89
SCSI Hard Disk Drives	--Table of Contents	04/91
	--Basics	04/89
	(except pages 1.3, 1.7	04/91
	(except pages 1.1, 1.10, 1.11)	02/91
	(except pages 1.5-1.9)	04/89
	(except page 1.2)	01/90
	--Take-Apart	04/89
	(except pages 2.2, 2.3, 2.10, 2.12)	04/91
	(except pages 2.21-2.27)	09/89
	(except pages 2.17-2.20)	01/90
	(except pages 2.1, 2.8, 2.9)	10/90
	--Diagnostics	08/90
	(except pages 3.1, 3.2, 3.12-3.22)	01/90
	--Troubleshooting	05/87
	(except pages 4.3-4.5)	04/89
	(except pages 4.1, 4.2, 4.6-4.9)	01/90
	--SCSI Interface Card	10/89
	--Additional Procedures	10/87
	(except pages 6.2, 6.3, 6.6)	04/89
	(except pages 6.4, 6.5)	06/89
	(except pages 6.1, 6.7-6.9)	11/89
	--Illustrated Parts List	05/87
	(except pages IPL.1, IPL.8, IPL.9)	04/91
	(except pages IPL.10, IPL.11)	10/87
	(except pages IPL.2, IPL.4, IPL.7)	09/89
	(except page IPL.3)	11/89
	(except page IPL.5)	10/90

Apple Tape Backup 40SC	--Table of Contents	11/87
	--Basics	07/87
	(except pages 1.1, 1.4, 1.5)	11/87
	--Take-Apart	07/87
	(except pages 2.8-2.15)	11/87
	--Troubleshooting	07/87
	--Preventive Maintenance	11/87
	(except page 4.3)	05/89
	--Illustrated Parts List	07/87
AppleCD SC	--Table of Contents	02/90
	--Basics	05/88
	(except pages 1.1, 1.5)	02/90
	--Take-Apart	05/88
	(except pages 2.1, 2.2, 2.10, 2.11, 2.15)	07/88
	(except pages 2.4, 2.5, 2.12-2.14)	02/90
	--Diagnostics	07/88
	(except pages 3.3, 3.6, 3.7)	09/88
	--Troubleshooting	02/90
	--Additional Procedures	02/90
	--Illustrated Parts List	05/88
	(except pages IPL.2, IPL.3)	02/90

Apple Technical Procedures

Modems

Technical Procedures

❑ TABLE OF CONTENTS

Section 1 – 300/1200 Modems Troubleshooting & Take-Apart	1.3	Troubleshooting
	1.3	Introduction
	1.3	Modem Self-Test
	1.6	Modem Verification Test
	1.7	Back-to-Back Modem Test
	1.11	Take-Apart
	1.11	PCB Removal
Section 2 – Apple Personal Modem	2.2	Introduction
	2.2	Equipment Required
	2.3	Power Test
	2.4	Computer Test
	2.5	Self-Test Mode
Section 3 – Apple Data Modem 2400	3.3	Basics
	3.3	Product Overview
	3.4	Active and Pass-Through Modes
	3.4	Controls and Indicators
	3.5	Connectors
	3.6	Theory of Operation
	3.7	Specifications
	3.9	Take-Apart
	3.9	Top Case
	3.10	Main Logic Board and Speaker
	3.14	Troubleshooting
	3.14	Power-On Test

Section 4 – Diagnostics

4.2 Introduction
4.2 ModemTest
4.3 AppleLink
4.4 Testing Using ModemTest
4.4 Testing the Apple Data Modem 2400
4.8 Testing the Portable Data Modem 2400
4.10 Testing the Int'l XP 2400
4.13 ModemTest Reference
4.13 Illustrations Menu
4.13 Test Selections/Configuration Window
4.13 Keyboard Equivalents
4.14 Installing ModemTest on a Hard Disk
4.15 Troubleshooting Checklist
4.15 General
4.15 Problems When Testing with ModemTest
4.16 Problems When Testing with AppleLink

Illustrated Parts List

IPL.3 Apple 300/1200 Modems (Figure 1)
IPL.5 Apple 300/1200 Modems – Cables and Connectors (Figure 2)
IPL.7 Apple Personal Modem and APM Modem Cables (Figure 3)
IPL.9 Apple Data Modem 2400 (Figure 4)

©Apple Computer, Inc., 1985-1990. No portion of this document may be reproduced in any form without the written permission of Apple Computer, Inc.

Macintosh, ImageWriter, AppleTalk, MacTerminal, AppleLink, Apple, Multifinder, and the Apple logo are registered trademarks of Apple Computer, Inc.

AppleFax, Finder, and ModemTest are trademarks of Apple Computer, Inc.

Hayes is a registered trademark of Hayes Microcomputer Products, Inc.

TouchTone is a trademark of Western Electric.

Apple Technical Procedures

300/1200 Modems

Section 1 – Troubleshooting & Take-Apart

❑ CONTENTS

1.3 Troubleshooting
1.3 Introduction
1.3 Modem Self-Test
1.6 Modem Verification Test
1.7 Back-to-Back Modem Test
1.11 Take-Apart
1.11 PCB Removal

❑ TROUBLESHOOTING

Introduction

Most of the problems with modems will occur during the installation procedures. Other problems may occur only with certain baud rates or modes of operation. The purpose of this document is to give Apple Dealer Service-persons step-by-step checkout procedures to test, evaluate, and diagnose any failure related to the operation of either the Apple 300 or Apple 1200 MODEMs. These procedures can be performed using either an Apple II+, Apple IIe or Apple III. For testing and troubleshooting of modems connected to Macintosh or Lisa systems, refer to the Modem Manual (Part II) for those systems.

Self Test

Materials Required

Modem 300/1200 User's Manual (Part 1: Reference)
Apple II+, IIe, or III system with drive and monitor
Apple Term program diskette (Apple Term II or Apple Term III)
Super Serial Card (for Apple II+ or IIe only)
Modem 300/1200 User's Manual (Part II for Apple II or Apple III)

Note: There are two Part II manuals, one for Apple II+ and IIe systems, and one for Apple III systems. Use the one that matches your system.

Procedure

1. Connect the modem to a telephone line according to the instructions on page 14 (start at the top of the page) of the Modem 300/1200 User's Manual. (Part 1: Reference).

2. Complete the modem hook-up to your computer according to the instructions in chapter 1 of the Modem 300/1200 User's Manual (Part II).

3. Run the self-test given in chapter 1 (see Testing with the Self-Test Procedure) of the Modem 300/1200 User's Manual (Part II).

4. After completing the self-test, press and hold down the <OPEN-APPLE> key and type "Q" (IIe) or hold down the <ESCAPE> key and type "Q" (II+) to return to the main menu.

5. Type "C" to enter the **Change Configuration** menu. You will now select a different speed and repeat the self test.

6. Use the arrow keys (IIe) or arrow keys and space bar (II+) to select 110 baud.

7. Repeat steps 3 and 4. Press <ESCAPE> to return to the main menu.

8. If you are testing a 300 baud modem, skip this step and go on to step 9. Type "C" to enter the **Change Configuration** menu. Use the arrow key (IIe) or <SPACE> (II+) to select 1200 baud. Repeat steps 3 and 4.

9. Return the baud setting to 300 baud.

10. If the self-test passes skip over this step and perform the **MODEM VERIFICATION TEST**. If the self-test fails, check your installation using the checklist below:

    - Verify the setting of the switches on the back of your modem.

    - Is the modem data cable securely connected to the computer and to the modem?

    - Is the modem power module connected to the modem?

      Note: Inspect the modem power module connector for bent or missing pins?

    - Is the modem power module plugged into an electrical outlet?

- Is the modem turned on?

- Verify the setting of the DIP switches on the Super Serial Card (Apple II+ or IIe only).

- Verify that the jumper block on the Super Serial Card has its triangle pointing to the word MODEM (Apple II+ or IIe only).

If no problems are found during the installation check, replace the following modules (in the order listed) one at a time and rerun the self-test:

- power module
- modem data cable
- modem PCB

After isolating and repairing the problem, continue on to the **MODEM VERIFICATION TEST**.

Modem Verification Test

This test will verify the correct operation of the modem and the telephone lines.

Materials Required

Apple II+, IIe, or III system with drive and monitor
Super Serial Card (if Apple II+ or IIe is used)
Apple Term program diskette
Local telephone line and a user service

Note: The user service may be a local bulletin board or any data service as long as the baud rate and protocol are known and can be verified. Do not attempt to test a modem by dialing an unverified user service. The results will be very confusing

Procedure

1. Obtain the telephone number of a compatible user service.

2. From the Apple Term main menu, type "U" to enter the phone directory menu.

3. Add the telephone number of the user service by holding down the <OPEN-APPLE> key and typing "A" (IIe) or holding down the <CONTROL> key and typing "A" (II+). The cursor will appear at the first available line on the telephone list.

4. Type a name or label that lets you identify the number to be added. Press <RETURN> and the cursor will move to the number column.

5. Type the complete telephone number including any prefixes required to get an outside line. Do not use spaces or dashes to separate parts of the telephone number. Press <RETURN> when you are finished entering the telephone number.

6. Press <ESCAPE> to get out of the phone directory screen and return to the main menu.

7. Type "E" to enter the terminal mode.

8. Hold down the <OPEN-APPLE> key and type "D" (IIe) or hold down the <CONTROL> key and type "D" (II+) - this will automatically dial the number you entered.

   Note: If the **CONNECT** message appears on your monitor screen and a message from the user service you dialed appears, your modem is working properly. If a **NO CARRIER** message appears on your screen, your modem was unable to connect you with the number selected and you should replace the following components (one at a time) in the order listed:

   - telephone cable
   - modem power module
   - modem PCB
   - modem data cable

After isolating and repairing the problem, verify correct operation by running the **MODEM VERIFICATION TEST** again.

Back-To-Back Modem Test

This is an optional test that requires two complete computer systems and two identical modems. Perform this test only when a customers modem does not function correctly, but no problem can be found by running the **SELF-TEST** or **MODEM VERIFICATION TEST**.

Materials Required

(2) Apple II+, IIe, or III systems with drives and monitors
(2) Super Serial Cards (one for each computer if Apple II+ or IIe is used
(2) Apple Term program diskettes
(2) identical modems (one modem must be a known good unit)
(2) local telephone lines (two separate phone lines must be used)

Note: If the modem fails any steps of this procedure, replace the modem power module and repeat the test. If that does not cure the problem, replace the modem PCB and repeat the test. If the modem passes all steps of this procedure, the **SELF-TEST**, and the **MODEM VERIFICATION TEST**, but the customer still cannot get the modem to work at their site, have the customer contact the telephone company to investigate their telephone line.

Procedure

1. With both modems installed according to the User's Manual instructions, turn the computers and modems on and boot the Apple Term software on both systems.

2. On the system with the suspected bad modem, type "U" to enter the phone directory menu.

3. Add the telephone number of the known good modem to the phone directory by holding down the <OPEN-APPLE> key and typing "A" (IIe) or holding down the <CONTROL> key and typing "A" (II+). The cursor will appear at the first available line on the telephone list.

4. Press <RETURN> and the cursor will move to the number column.

5. Type the telephone number of the known good modem. Do not use spaces or dashes to separate parts of the telephone number. Press <RETURN> when you are finished entering the telephone number.

6. Press <ESCAPE> to get out of the phone directory screen and return to the main menu.

7. Type "E" on both computers to enter the terminal mode.

8. On the system with the suspected bad modem, hold down the <OPEN-APPLE> key and type "D" (IIe) or hold down the <CONTROL> key and type "D" (II+) - this will automatically dial the number you entered (the known good modem). The **CONNECT** message should appear on your monitor screen; if it does, go to step 9. If a **NO CARRIER** message appears on your screen, check the setup of both modems and computers, then dial again. If a **NO CARRIER** message appears again, turn both modems and computers off, replace the PCB in the suspected bad modem, and start the test again from step 1. If the test passes, the modem PCB was faulty.

9. On the system with the suspected bad modem, type a short message and verify that it is displayed on the screen of the system with the known good modem.

10. On the system with the known good modem, type a short message and verify that it is displayed on the screen of the other system (the suspected bad modem).

11. On the system with the suspected bad modem, hold down the <OPEN-APPLE> key and type "H" (IIe) or hold down the <ESCAPE> key and type "H" (II+) to hang up the modem. The screen should now have the message **NO CARRIER.**

12. On the system with the known good modem, hold down the <OPEN-APPLE> key and type "Q" (IIe) or hold down the <ESCAPE> key and type "Q" (II+) to return to the main menu.

13. Type "U" to enter the phone directory menu.

14. Add the telephone number of the suspected bad modem to the phone directory by holding down the <OPEN-APPLE> key and typing "A" (IIe) or holding down the <CONTROL> key and typing "A" (II+). The cursor will appear at the first available line on the telephone list.

15. Press <RETURN> and the cursor will move to the number column.

16. Type the telephone number of the suspected bad modem. Do not use spaces or dashes to separate parts of the telephone number. Press <RETURN> when you are finished entering the telephone number.

17. Press <ESCAPE> to get out of the phone directory screen and return to the main menu.

18. Type "E" to enter the terminal mode.

19. Hold down the <OPEN-APPLE> key and type "D" (IIe) or hold down the <CONTROL> key and type "D" (II+) - this will automatically dial the number you entered (the suspected bad modem). The **CONNECT** message should appear on your monitor screen; if it does, go to step 20. If a **NO CARRIER** message appears on your screen, check the setup of both modems and computers, then dial again. If a **NO CARRIER** message appears again, turn both modems and computers off, replace the PCB in the suspected bad modem, and start the test again from step 1. If the test passes, the modem PCB was faulty.

20. Hold down the <OPEN-APPLE> key and type "H" (IIe) or hold down the <ESCAPE> key and type "H" (II+) to hang up the modem. The screen should now have the message **NO CARRIER**.

21. Hold down the <OPEN-APPLE> key and type "Q" (IIe) or hold down the <ESCAPE> key and type "Q" (II+) to return to the main menu.

22. Type "C" to enter the **Change Configuration** menu. Use the arrow keys to select touch-tone dialing.

23. Press <ESCAPE> to return to the main menu.

24. Type "E" to enter the terminal mode.

25. Hold down the <OPEN-APPLE> key and type "D" (IIe) or hold down the <CONTROL> key and type "D" (II+) - this will automatically dial the number you entered.

26. When the **CONNECT** message appears, type a short message and verify that it is displayed on the screen of the suspected bad modem. If the **CONNECT** message did not appear,or if the message you typed was not displayed on the suspected bad modem, replace the PCB in the suspected bad modem and run this test again.

❑ TAKE-APART

Note: There are two types of Modem 1200 PCB's, one that requires a sprayed case and one that does not. The sprayed Modem 1200 service stock and exchange modules cannot be used to repair the unsprayed Modem 1200's. See the Illustrated Parts List for the differing service stock part numbers for the sprayed case Modem 1200 and the unsprayed case Modem 1200.

PCB Removal

1. Carefully pry off the two rubber feet from the bottom front of the modem.

2. Remove the four screws holding the two case halves together.

3. Remove the bottom cover and set it aside.

4. Lift out the modem PCB.

5. Remove the service spare modem from the shipping box. Notice that the top and bottom covers are labeled "service use only". These covers must be returned with the faulty board for service credit.

6. Remove the service replacement board in the same way as you did the customers board. Replace the bad board with the service spare, after first confirming that the two are the same model.

7. Place the bad board on the service covers and fill out the service repair order information. Ship the bad board and/or modem power module to Apple.

Modems

Section 2 – Apple Personal Modem

❑ CONTENTS

2.2 Introduction
2.2 Equipment Required
2.3 Power Test
2.4 Computer Test
2.5 Self-Test Mode

❑ INTRODUCTION

Most of the problems with modems will occur during the installation procedures. Other problems may occur only with certain baud rates or modes of operation.

> ***Note:*** The Apple Personal Modem has no DIP switches to set. The baud rate, parity, and duplex settings for the modem are software controlled. The three baud rates available are 110, 300, or 1200. Verify all configuration settings on the application being used.

The Apple Personal Modem is composed of two pieces: the power connector (Figure 1, #1) and the body (Figure 1, #2). If the body is defective, *both* pieces must be returned to Apple. If the power connector is defective, this piece can be obtained separately.

For more information, refer to the *Apple Personal Modem User's Manual.*

Equipment Required

The following equipment will be needed for all procedures:

Apple Personal Modem
Apple Personal Modem User's Manual
Phone line
Appropriate cables for connection to computer

One of the following combinations:

Computer	Software
Apple II Family	Access II or AppleTerm
Macintosh	MacTerminal
Macintosh XL	MacTerminal or LisaTerminal

❑ POWER TEST

The modem will beep when it is first plugged in, which means that it is receiving power and its circuitry is operating properly.

If the modem doesn't beep when it is plugged in, check the following:

1. Turn the volume control clockwise (see Figure 2), and try plugging in the modem again.

2. Verify that the power connector is firmly in place. Push it all the way in until it clicks into position. Try plugging in the modem again.

3. Exchange the whole unit. Try plugging in the new modem.

4. Continue to "Computer Test."

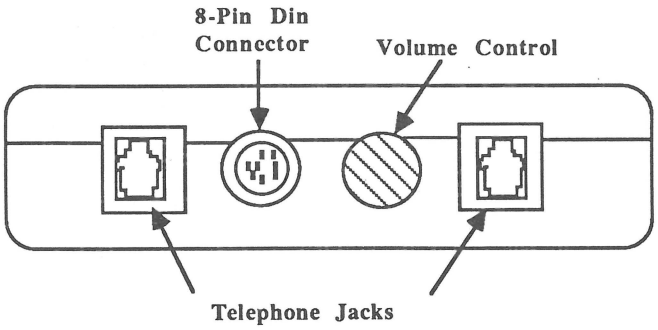

FIGURE 2

❑ COMPUTER TEST

Note: To set up the modem, refer to the *Apple Personal Modem User's Manual*, Chapter 1.

To be sure the modem and computer are communicating, do the following:

1. Load the communications software, turn on the computer, and verify the configuration settings.

   If you do not know how to use the software, refer to the appropriate software manual.

2. Enter terminal mode (if applicable). Type AT and press <Return>.

   If everything is connected properly, the screen will display: **OK**.

   If you type AT and press <Return> a few times and don't get an **OK** response, do the following:

   a) Verify that the software is set for 110, 300, or 1200 baud.

   b) Power off the computer and unplug the modem. Verify that the Super Serial Card DIP switches are set correctly (Apple II users only), and that the cable and connections are correct (refer to the *Apple Personal Modem User's Manual*, Chapter 1).

   c) Plug in the modem, turn on the computer, boot the communications software, and enter terminal mode.

   d) Type AT and press <Return>. If you do not get an **OK** response, exchange the whole unit and try again.

3. Continue to "Self-Test Mode."

❑ SELF-TEST MODE

You can run an Analog Loopback Test on your modem by following these instructions. (More information on these procedures can be found in *Apple Personal Modem User's Manual*, Appendix D.)

1. Load your software and enter terminal mode.

2. Type the modem command string ATS16=1D and press <Return>.

   The modem speaker will turn on, allowing you to hear a dial tone or high-pitched tone. The message **CONNECT** (or **CONNECT 1200**) will be displayed on your screen.

3. Type a short test message—anything at all.

   As you type, the modem directs the characters to loop back to the computer screen. If you can see what you're typing, the modem is functioning. (Don't worry if the <Return> key doesn't advance the cursor to the next line.)

4. To exit the test, wait one second and type +++ (three pluses) to go back to command mode.

   Your screen should display the message **OK**.

5. Type ATZ and press <Return>.

   This command will turn off the self-test mode. An **OK** response will appear on the display.

If the modem fails to function, exchange the whole unit and run the self test again.

For further information on specific problems, refer to the *Apple Personal Modem User's Manual*, Chapter 3.

Modems

Section 3 – Apple Data Modem 2400

❑ CONTENTS

3.3 Basics
3.3 Product Overview
3.4 Active and Pass-Through Modes
3.4 Controls and Indicators
3.5 Connectors
3.6 Theory of Operation
3.7 Specifications
3.9 Take-Apart
3.9 Top Case
3.10 Main Logic Board and Speaker
3.14 Troubleshooting
3.14 Power-On Test

❑ BASICS

Product Overview

These procedures cover the troubleshooting and repair of the Apple Data Modem 2400.

The Apple Data Modem 2400 is an external, stand-alone modem for Apple II and Macintosh family computers. Features of the modem include:

- Automatic and manual dialing and answering
- DTMF and pulse dialing
- An extended version of the Hayes® command set
- Local and remote self-test
- Implementation of levels 1 through 4 of the Microcom Networking Protocol (MNP) error correction standard
- Support of the Bell 103 (300 bps), Bell 212A (1200 bps), CCITT V.22A/B (1200 bps), and CCITT V.22bis (2400 bps) communication standards
- Two serial ports—one for connecting to the computer and one for daisy-chaining another serial device (See "Active and Pass-Through Modes.")
- Two RJ-11 connectors—one for connecting the modem to the telephone line and one for connection to a telephone handset
- Modem settings stored in nonvolatile RAM

Figure 1 shows a front view of the unit with the external power adapter.

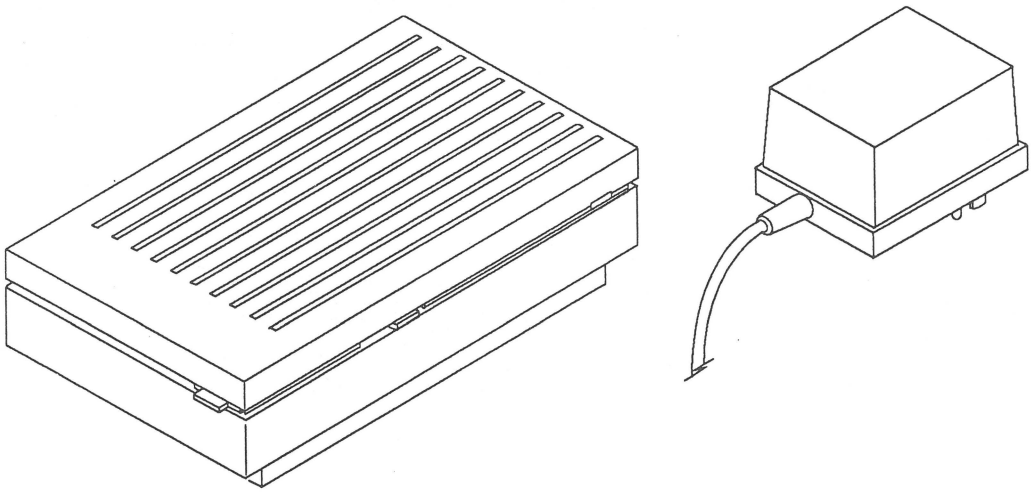

FIGURE 1
Apple Data Modem 2400

Active and Pass-Through Modes

The Data Modem 2400 can be used in one of two modes—active or pass-through. When the modem is in active mode, communication is established between the modem and the host computer. When the modem is in pass-through mode, the modem is bypassed and the host computer communicates with the device attached to the pass-through connector. The pass-through connector is marked with a telephone handset.

Controls and Indicators

The Apple Data Modem 2400 has three controls—the **power switch**, the **mode select switch**, and the **speaker volume control**. The power switch (Figure 2) applies the DC voltages available from the power adapter to the modem. The mode select switch (Figure 3) toggles the modem between pass-through and active mode. The speaker volume control adjusts the volume of the built-in speaker.

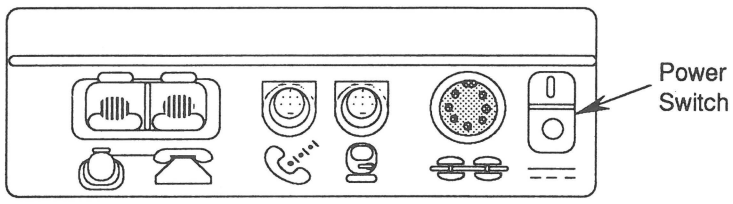

FIGURE 2
Power Switch

Two indicators are also provided—one **amber** and the other **green**. When the green indicator is lit, the modem is active and ready. When the amber indicator is lit, the modem is in pass-through mode; the modem is in this mode briefly after power on. Figure 3 shows the LEDs and the mode select switch.

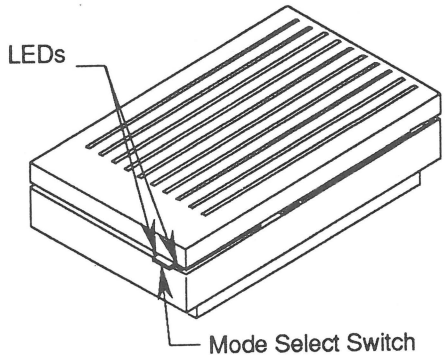

FIGURE 3
LEDs and Mode Select Switch

Connectors

Three of the connectors on the back of the modem must be used for operation:

- The **power connector** (Figure 4, #1) connects the modem to the external power adapter.

  Note: The Apple IIc and AppleFax™ Modem use the same power adapter connector as the Data Modem 2400. Although it is possible to connect an Apple IIc or AppleFax Modem power adapter to the Data Modem 2400, the Data Modem 2400 will not work with either of those power adapaters.

- The **Macintosh connector** (Figure 4, #2) connects the modem to the host computer.

- The **telephone connector** (Figure 4, #3) connects the modem to the telephone line.

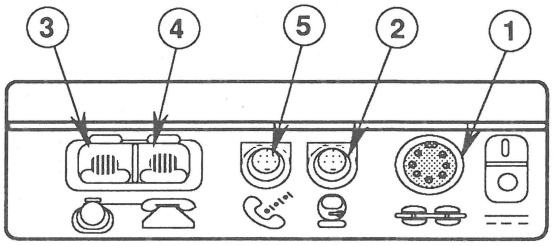

FIGURE 4
Connectors

The minimum configuration provided by these three connectors establishes a data path between the host computer and the worldwide network of telephone lines.

Two connectors on the Apple Data Modem 2400 serve auxiliary functions and are not required for operation. The second **telephone connector** (Figure 4, #4) can be used to connect a telephone to the same phone line used by the modem. The **modem connector** (Figure 4, #5) provides an additional serial port that may be used to connect a serial device, such as an ImageWriter® II, to the computer in a daisy-chain fashion.

Note: The maximum transmission speed of the daisy-chain port is 56.7 kilobits per second (kbps). This port cannot be used to daisy-chain an AppleTalk device.

Theory of Operation

Figure 5 provides a simplified block diagram of the Apple Data Modem 2400.

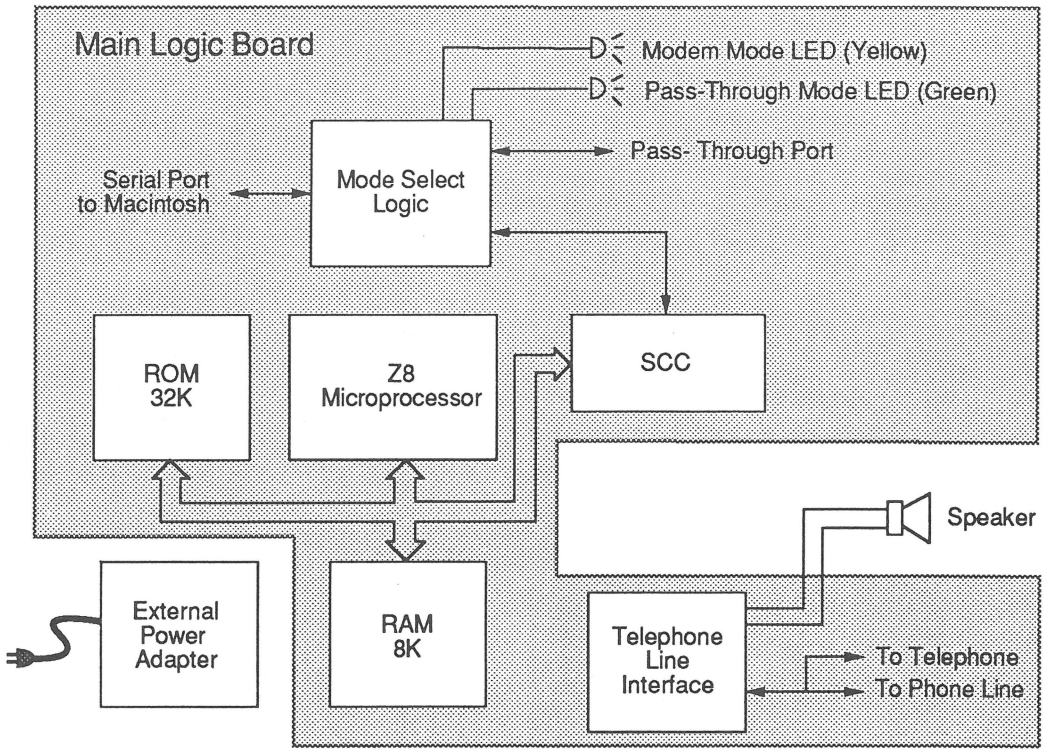

FIGURE 5
Block Diagram

Except for the power supply (external power adapter) and the speaker, all the functions described in Figure 5 are implemented on a single printed circuit board called the **main logic board**. Some power supply circuitry is located on the main logic board; however, most of the power supply circuitry is enclosed in the external power adapter (Figure 5).

Specifications

The following specifications apply to the US and Canadian version of the Apple Data Modem 2400.

Regulatory

FCC registration number:	BCG794-12381-DM-E
FCC ringer equivalence number:	1.1B
Canadian load number:	7
Jack type:	USOC RJ11 (US) CA 11 (Canada)

Communication

Protocol:	Asynchronous
Mode:	Full duplex
Transmission rates:	300 bps (Bell 103) 1200 bps (Bell V.22A/B and Bell 212A) 2400 baud (V.22bis)
Data formats:	7 data bits with 1 or 2 stop bits and fixed mark or space parity 7 data bits with 2 stop bits and no parity 8 data bits with 1 or 2 stop bits and no parity

Miscellaneous

Receiver dynamic range:	-10 dBm to -43 dBm full-duplex
Transmitter level:	-10 dBm ±1 dB, fixed
Frequency tolerance:	± 7 Hz
Error rates:	Less than 1 in 10^6 on 3002A (unconditioned line) channel specifications, with Gaussian noise over a receiver level range of 3 dB above the carrier detect threshold
Operating modes:	Auto or manual dial
Error protocols:	Microcom Network Protocol (MNP) classes 1 through 4
Computer Interface:	RS-422A, standard Apple Mini DIN-8 connector

Telephone Interface	Tone:	DTMF (dual-tone multi-frequency)
	Frequency tolerance:	±1%
	Pulse:	
	Duty cycle:	39%/61% mark/break ratio
	Dialing rate:	10 pps
Physical	Weight:	500g (excluding power adapter)
	Dimensions:	200 mm x 120 mm x 45 mm
Electrical	Power consumption:	7 Watts maximum
	Power requirements:	110V AC ± 10%, 60 Hz
Environmental	Operating environment:	
	Ambient Temperature:	32°-104° F (0°–40° C)
	Relative Humidity:	95% (noncondensing)

❑ TAKE-APART

Top Case

To remove the top case:

Materials Required

Flat-blade screwdriver
Grounded workbench pad
Grounded wriststrap

Remove

1. Turn off the Apple Data Modem 2400 and detach the power cord, telephone cable(s), and interface cable(s).

2. Place the modem on the grounded workbench pad. **Be sure the pad is grounded and put on your grounding wriststrap.**

3. Locate the two plastic tabs shown in Figure 6, #1.

4. Using a screwdriver, **carefully** push in each plastic tab until you can lift the top case off the bottom case.

5. Lift the back of the top case up and forward until the interior latch on the front of the top case separates from the bottom case.

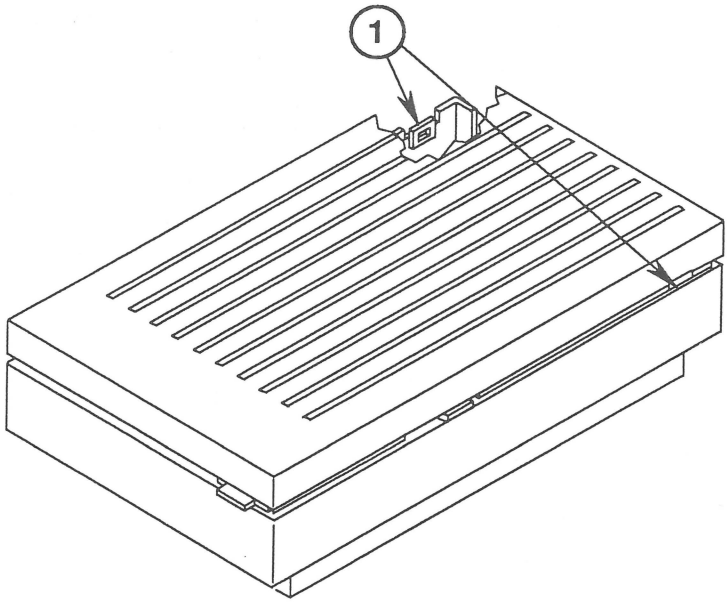

FIGURE 6
Top Cover Removal

Replace

1. Set the top case on top of the bottom case.
2. Push down on the front of the top case until it snaps into place.
3. Set one of the plastic tabs inside the back of the bottom case and push down on the top case until the tab snaps into place. Then push down on the other side of the top case until the other tab snaps into place. (If the second plastic tab will not fit inside the lower case, use a flat-blade screwdriver to push in gently on the tab while you push down on the top case.)

Main Logic Board and Speaker

To remove the main logic board and/or speaker:

Materials Required

#2 Phillips screwdriver
Grounded workbench pad
Grounded wriststrap

Remove

1. Remove the top case.
2. Lift up and remove the volume lever (Figure 7, #1).
3. Lift up and remove the light pipe assembly (Figure 7, #2).
4. Disconnect the speaker cable (Figure 7, #3).
5. Remove the two Phillips screws and star washers (Figure 7, #4).
6. Lift the main logic board out of the bottom case.
7. If you are replacing the speaker, lift the speaker out of the bottom case.

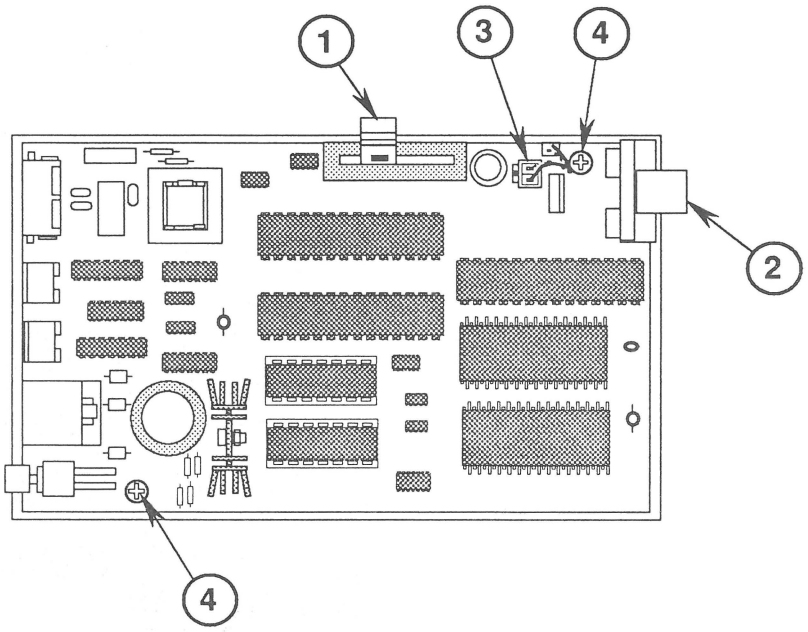

FIGURE 7
Main Logic Board and Speaker Removal

Replace

1. If the speaker was removed, place the speaker in the bottom of the case so that the cable extends toward the right side of the case (Figure 8, #1).

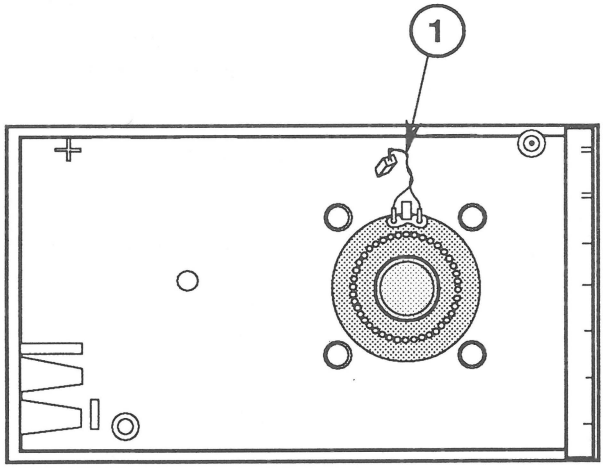

FIGURE 8
Speaker Wire Placement

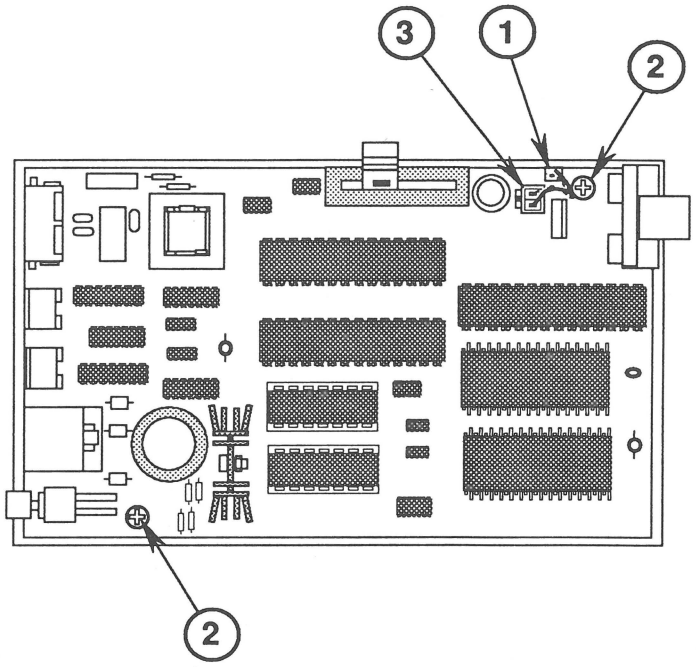

FIGURE 9
Main Logic Board and
Speaker Wire Placement

2. Position the main logic board above the bottom case and route the speaker cable through the slot on the upper-right side of the board (Figure 9, #1). Lower the main logic board into the bottom case.

3. Replace the two Phillips screws and star washers (Figure 9, #2).

4. Connect the speaker cable to the main logic board (Figure 9, #3).

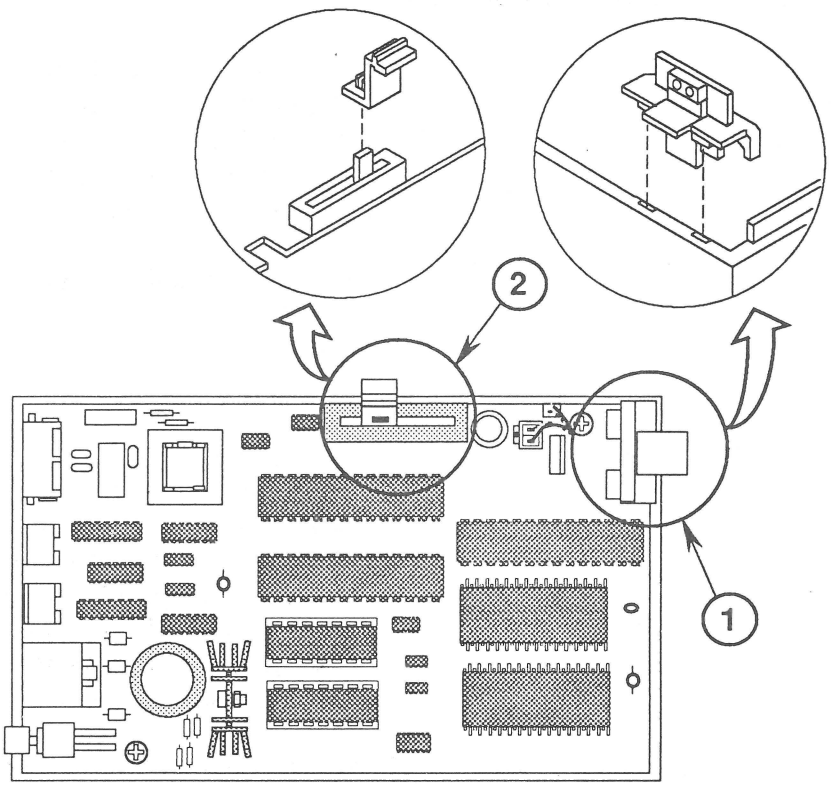

FIGURE 10
Volume Control Lever
and Light Pipe Assembly

5. Replace the light pipe assembly (Figure 10, #1).

CAUTION: *The smallest clear tabs on the bottom front of the light pipe assembly fit into the holes in the case. The assembly will break if the larger tabs (directly behind the smaller tabs) are forced into the holes.*

6. Replace the volume lever (Figure 10, #2).

7. Replace the top case.

❑ TROUBLESHOOTING

Most of the problems with modems will occur during installation. Other problems may occur only with certain baud rates, modes of operation, or telephone lines. Two steps are used to verify that the Data Modem 2400 is operating correctly:

1. The built-in self-test performs a quick power-on test of the modem. The power-on test is described below.

2. *ModemTest* verifies operation of all modem circuitry except the circuits that interface the modem to the telephone network. If a customer experiences problems when using the Data Modem 2400, *ModemTest* can isolate the fault to the modem, the computer, or problems with the connection between the modem and the telephone network. Setup and operating procedures for *ModemTest* are in Section 4, Diagnostics.

Note: The Apple Data Modem 2400 is software, not hardware, configurable. The baud rate, parity, data word length, and duplex settings for the modem are software controlled. Many modem-related failures are due to incompatible settings of the modem when used with a specific remote system. Verify that the configuration of the communication program and/or the interface card (Apple II family computers only) matches the configuration of the remote system.

Some modem-related failures, such as an inability to connect to electronic bulletin boards, are due to incorrectly set parameters. Because the Apple *ModemTest* diagnostic indiscriminately fails incorrectly set main boards, the cause of these failures can be unclear.

If the modem is unable to connect to electronic bulletin boards, reset the modem parameters to the default setting by holding down the Select button while switching the modem off, then on. Release the Select button when the modem is powered on and the green LED is lit on the modem's front panel.

For additional information on connecting the modem to the computer, refer to the *Apple Data Modem 2400 Owner's Guide*.

Power-On Test

When turned on, the Apple Data Modem 2400 will light the amber LED, perform a short self-test, sound two tones, and light the green LED. If this sequence is completed, the modem is receiving power and the self-test has completed successfully. You should then perform the additional testing procedures described in Section 4, Diagnostics.

If the modem doesn't complete this sequence when it is switched on, refer to the Power-On Test Troubleshooting Flowchart, Figure 11.

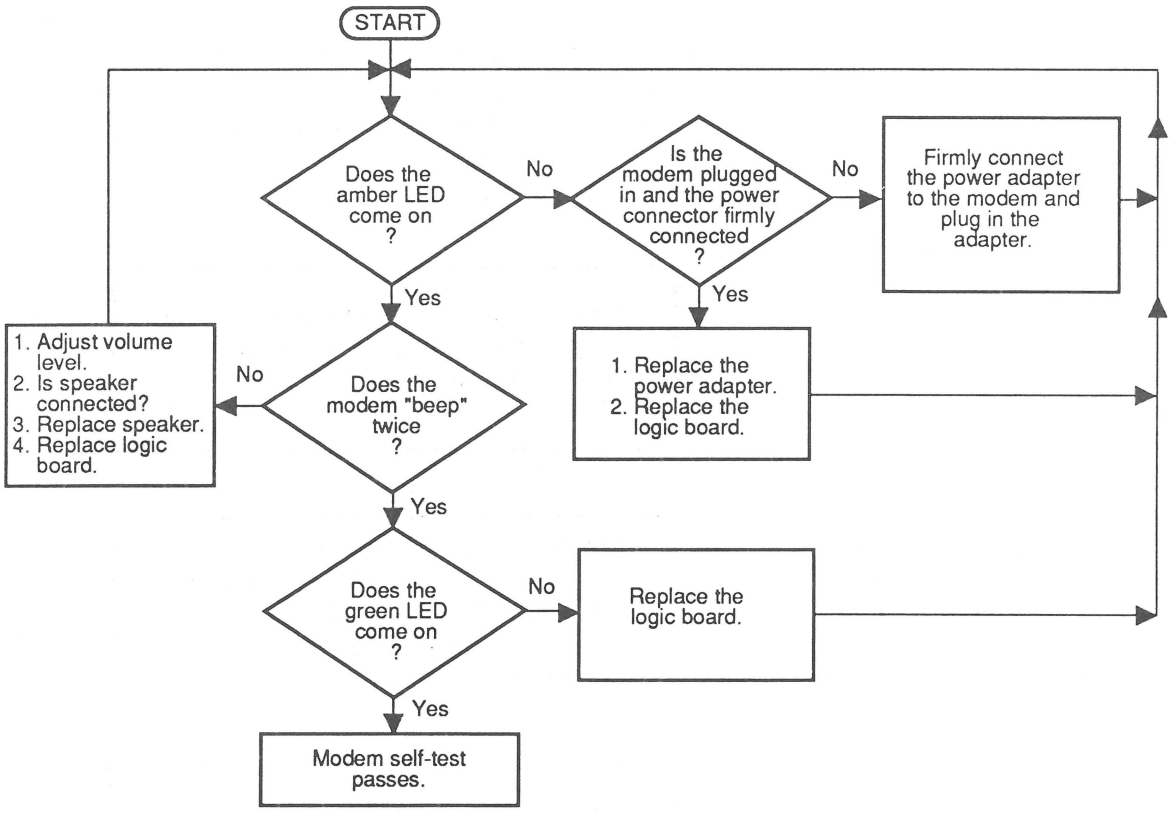

FIGURE 11
Power-On Test
Troubleshooting Flowchart

Communications Test

Note: For information on connecting the modem to the host computer, refer to the *Apple Data Modem 2400 Owner's Guide,* Chapter 1.

To see if the modem and computer are communicating, do the following:

1. Load the communications software, turn on the computer, and verify the configuration settings.

2. Enter terminal mode (if applicable). Type AT and press <Return>.

   If everything is connected properly, the screen will display **OK**.

   If you type AT and press <Return> a few times and don't get an **OK**, refer to the Communications Fault Troubleshooting Flowchart, Figure 12.

3. Continue to the Loopback Test.

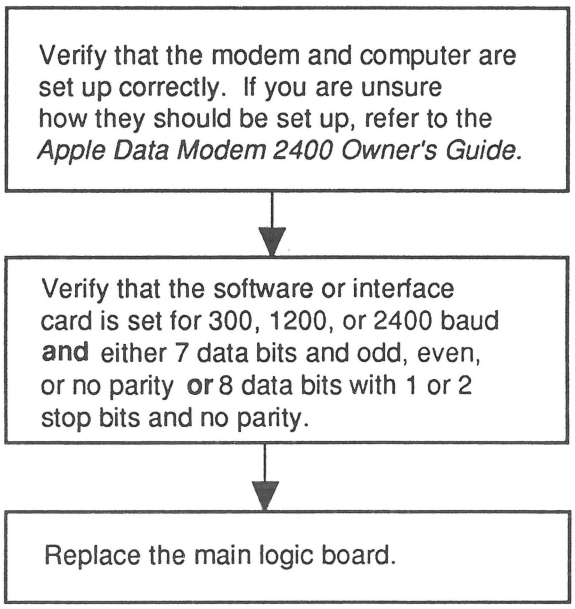

FIGURE 12
Communications Fault Troubleshooting Flowchart

Loopback Test

You can run an **analog loopback test** on your modem by following these instructions. (Additional information on these procedures can be found in the *Apple Data Modem 2400 Owner's Guide*, Appendix D.)

Note: The modem must be connected to a known-good telephone line to perform the following test.

1. Connect the modem to the telephone line and the computer. Attach the power adapter and plug it in.

2. Turn on the modem.

3. Load your communications software and enter terminal mode.

4. Type the modem command string ATS16=1D and press <Return>.

   The modem speaker will turn on, allowing you to hear a dial tone or high-pitched tone. The message **CONNECT** will be displayed on your screen.

5. Type a short test message—anything at all.

   As you type, the modem directs the characters to loop back to the computer screen. If you can see what you're typing, the modem is functioning. Don't worry if the <Return> key doesn't advance the cursor to the next line.

6. To exit the test, wait one second and type +++ (three pluses) to go back to command mode.

   Your screen should display the message **OK**.

7. Type ATZ and press <Return>.

   This command will turn off the self-test mode. An **OK** response will appear on the display.

If the modem fails the self-test, refer to the Loopback Test Fault Troubleshooting Flowchart, Figure 13.

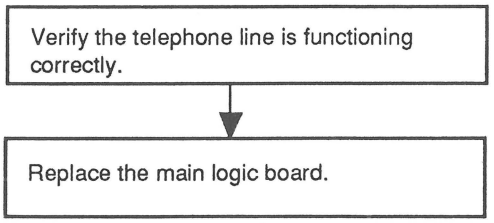

FIGURE 13
Loopback Test Fault Troubleshooting Flowchart

Apple Technical Procedures

Modems

Section 4 – Diagnostics

❑ CONTENTS

4.2 Introduction
4.2 ModemTest
4.3 AppleLink
4.4 Testing Using ModemTest
4.4 Testing the Apple Data Modem 2400
4.8 Testing the Portable Data Modem 2400
4.10 Testing the Int'l XP 2400
4.13 ModemTest Reference
4.13 Illustrations Menu
4.13 Test Selections/Configuration Window
4.13 Keyboard Equivalents
4.14 Installing ModemTest on a Hard Disk
4.15 Troubleshooting Checklist
4.15 General
4.15 Problems When Testing with ModemTest
4.16 Problems When Testing with AppleLink

❑ INTRODUCTION

Testing of the Apple Data Modem 2400, Portable Data Modem 2400, and Int'l XP 2400 modems is accomplished through two methods—by using *ModemTest*™ (a disk-based diagnostic program) and by using AppleLink® to establish communication with a known-good modem. *ModemTest* checks all the circuitry of the modem, with the exception of circuits that interface the modem to the telephone network. To verify that these circuits are functioning correctly, the modem should be used to connect to a second computer and modem setup or dial-up service, such as AppleLink.

This section covers the setup, operating procedures, and reference information for *ModemTest* and provides a troubleshooting checklist to which you can refer if you encounter problems diagnosing modem failures. If you need assistance in using AppleLink to perform the final check of the modem, refer to the documentation provided with AppleLink.

ModemTest

ModemTest supports testing of all the modem's circuitry with the exception of the circuits used to connect the modem to the telephone network. Specifically, *ModemTest* can be used to perform the following tests:

Self-Tests – Executes the modem's built-in self-test diagnostics. The self-test checks RAM, ROM, and the microprocessor. These are the same tests that run when the modem is turned on.

Command Tests (Apple Data Modem 2400 and Portable Data Modem 2400 only) – Tests the functionality of each of the Hayes-compatible commands.

Register Tests (Apple Data Modem 2400 and Portable Data Modem 2400 only) – Tests each of the modem's hardware registers. To pass the test, each register must be able to be written to, changed, and read from within its specified range.

Analog Tests – Tests the circuits in the modem used to perform digital-to-analog and analog-to-digital signal processing, handshaking, and baud rate changes. This test does not check the circuitry used to connect the modem to the telephone network.

Digital Tests – Tests the digital portion of the modem.

Speaker Test – Tests the modem's speaker circuitry. The speaker test generates the Touch-Tone tones for 0 through 9, followed by a carrier signal. (The Touch-Tone tones are not generated for the Int'l XP 2400.)

Pass-through Mode Test (Apple Data Modem 2400 only) – Tests the pass-through port on the Data Modem 2400. This test verifies that data can be passed and is passed only at the proper times.

Ring Detect Test – Tests the modem's ability to detect an incoming phone call. The modem being tested must be connected to a working analog telephone line. A telephone or second computer with a modem is used to dial or originate a call. To pass the Ring Detect test, the modem must answer the incoming call. This test can also be used to check the wake-up when phone rings feature of the Macintosh Portable.

DAA Test (Int'l XP 2400 only) – Tests the circuitry within the data access arrangement module. The DAA test verifies that the DAA is able to detect the presence and absence of a dial tone.

All of the above tests are individually selectable and may be used in any combination.

AppleLink

Although *ModemTest* provides extensive testing, it is not able to test 100% of the modem's circuitry. To ensure that the modem is capable of communicating properly over the telephone network, the modem must be attached to an analog telephone line and connected to another system equipped with a modem.

Since most Apple-trained service technicians have access to AppleLink and are already familiar with its operation, Apple recommends that AppleLink be used to check the telephone network interface circuitry.

❑ TESTING USING MODEMTEST

Testing the Apple Data Modem 2400

The following procedures cover testing of the Apple Data Modem 2400. Any model Macintosh computer except the 128K, 512K, or 512K enhanced can be used.

Note: The Apple Data Modem 2400 is software, not hardware, configurable. The baud rate, parity, data word length, and duplex settings for the modem are software controlled. Many modem-related failures are due to incompatible settings of the modem when used with a specific remote system. Verify that the configuration of the communication program being used and/or interface card (Apple II family computers only) match the configuration of the remote system.

Some modem-related failures, such as an inability to connect to electronic bulletin boards, are due to incorrectly set parameters. Because the Apple *ModemTest* diagnostic indiscriminately fails incorrectly set main boards, the cause of these failures can be unclear.

If the modem is unable to connect to electronic bulletin boards, reset the modem parameters to the default setting by holding down the Select button while switching the modem off, then on. Release the Select button when the modem is powered on and the green light display is visible on the modem's front panel.

Materials Required

ModemTest diagnostic disk
Macintosh computer (excluding the 128K, 512K, or 512K enhanced)
Peripheral-8 serial cable (mini DIN-8 to mini DIN-8)

For the Ring Detect test, you will also need:
An analog telephone line with an RJ-11 jack
An RJ-11 telephone cable
A telephone or second computer and modem from which to dial the modem being tested

For the Pass-through Mode test, you will also need a second peripheral-8 serial cable

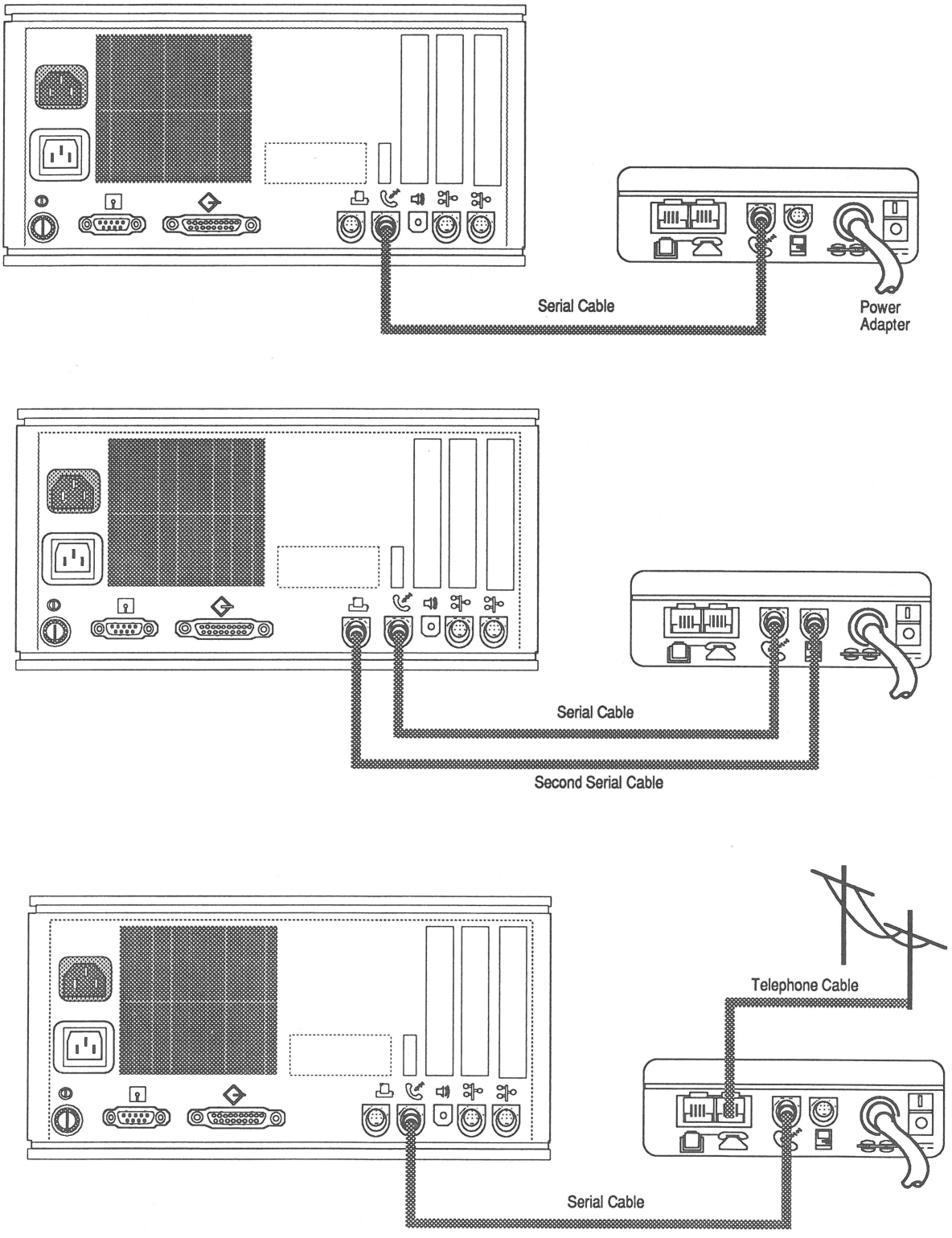

FIGURE 1
Apple Data Modem 2400 Setup

Setup

The following setup is shown in Figure 1.

1. Set up the computer if it is not ready for use.
2. Connect the power adapter to the Data Modem 2400 and plug in the power adapter.
3. Connect one end of the serial cable to the modem port on the Data Modem 2400.
4. Connect the other end of the serial cable to the modem port on the computer.
5. If you are running the Ring Detect test, connect one end of the telephone cable to an available telephone jack. **Do not** connect the other end to the modem yet. Connecting the cable at this time can yield unpredictable results.
6. If you are running the Pass-through Mode Test, connect one end of the other serial cable to the printer port on the Data Modem 2400 and the other end to the printer port on the computer.
7. Turn on the Data Modem 2400.

Running ModemTest

1. Place the *ModemTest* diagnostic disk into any available floppy disk drive.
2. Switch on the computer. If you are using a Macintosh Portable, press any key except <Caps Lock> to bring the computer out of system sleep.
3. If a Macintosh Portable is being used and an internal modem is installed, check to see that the external modem is selected in the Control Panel. Check the selection by opening the Control Panel and clicking the Portable CDEV icon. (You may need to use the scroll bar to find the icon for the Portable.) If the external modem is not selected, select it.
4. When the desktop appears, double-click the *ModemTest* disk icon to open the disk if it is not already open.
5. To launch the program, double-click the *ModemTest* application icon.

6. The Modem Selection window appears. Click on **Data Modem 2400**.

   The Test Selections/Configuration window appears. After a slight delay while the program establishes communications with the modem, the modem configuration appears.

7. Select the tests to be run by clicking the name of each test until an **X** appears in the box next to the test name.

8. If you want to repeat testing of the modem, click **Looping** until an **X** appears in the box.

9. If you want to save this setup for future use, click **Save Test Selections**.

10. Click **Start Tests** or press <Return> to begin testing. Click **Cancel** to return to the modem selection window.

Ring Detect Test

If you selected the Ring Detect test, you will need to connect the free end of the telephone cable when the Ring Detect test begins. You will be prompted to connect the cable at the proper time.

After the Ring Detect test begins and the telephone cable is connected, wait approximately 30 seconds before dialing the telephone number of the modem under test.

11. If testing is completed and all tests ran without error, the Test Results window displays the message **All selected tests passed**. If any problems occur, an Alert box indicates the type of failure and the module you must replace.

12. If you desire a printed copy of the test results, click **Print**.

13. When you finish using *ModemTest*, select **Quit** from the File menu.

Testing the Portable Data Modem 2400

The following procedures cover testing of the Apple Portable Data Modem 2400. A Macintosh Portable computer is required.

Materials Required

ModemTest diagnostic disk
A Macintosh Portable computer

For the Ring Detect test, you will also need:
An analog telephone line with an RJ-11 jack
An RJ-11 telephone cable
A telephone or second computer and modem from which to dial the modem being tested

Setup

1. Install the modem card to be tested. Procedures for installing the modem can be found in *Macintosh Portable Technical Procedures*, Section 5, Additional Procedures, "Internal Data Modems."

2. If you are running the Ring Detect test, connect one end of the telephone cable to an available telephone jack. **Do not** connect the other end to the modem yet. Connecting the cable at this time can yield unpredictable results.

3. Set up the computer if it is not ready for use.

Running ModemTest

1. Place the *ModemTest* diagnostic disk in any available floppy disk drive.

2. Press any key except <Caps Lock> to bring the computer out of system sleep.

3. When the desktop appears, open the Control Panel desk accessory and click on the Portable icon. (You may need to use the scroll bar to find the icon for the Portable.) Click on the Internal Modem icon to highlight the button. Close the Control Panel.

4. Double-click the *ModemTest* disk icon to open the disk if it is not already open.

5. To launch the program, double-click the *ModemTest* application icon.

6. The Modem Selection window will appear. Click **Portable Data Modem 2400.**

   The Test Selections/Configuration window appears. After a slight delay while the program establishes communications with the modem, the modem configuration appears.

7. Select the tests to be run by clicking on the name of each test until an **X** appears in the box next to the test name.

8. If you want to repeat testing of the modem, click **Looping** until an **X** appears in the box.

9. If you want to save this setup for future use, click **Save Test Selections**.

10. Click **Start Tests** or press <Return> to begin testing. Click **Cancel** to return to the modem selection window.

Ring Detect Test

If you selected the Ring Detect test, you must connect the free end of the telephone cable when the Ring Detect test begins. You will be prompted to connect the cable at the proper time.

After the Ring Detect test begins and the telephone cable is connected, wait approximately 30 seconds before dialing the telephone number of the modem under test.

11. If testing is complete and all tests ran without error, the Test Results window displays the message **All selected tests passed**. If any problems occur, an Alert box indicates the type of failure and the module to be replaced.

12. If you desire a printed copy of the test results, click **Print**.

13. When you are finished using *ModemTest*, select **Quit** from the File menu.

Testing the Int'l XP 2400

The following procedures cover the testing of the Int'l XP 2400, data access arrangement modules, and optional MNP board. A Macintosh Portable computer is required.

Materials Required

ModemTest diagnostic disk
A Macintosh Portable computer
Correct model Data Access Arrangement (DAA) module

For the Ring Detect test you will also need:
- An analog telephone line
- An RJ-11 telephone cable
- A telephone or second computer and modem from which to dial the modem being tested

Setup

1. Install the modem card to be tested. If an MNP board is also being tested, connect it to the modem at this time. Procedures for installing the modem can be found in *Macintosh Portable Technical Procedures*, Section 5, Additional Procedures, "Internal Data Modems."

2. Connect the data access arrangement module to the modem card.

3. If you are running the Ring Detect test, connect one end of the telephone cable to an available telephone jack. **Do not** connect the other end to the modem yet. Connecting the cable at this time can yield unpredictable results.

4. Set up the computer if it is not ready for use.

Running ModemTest

1. Place the *ModemTest* diagnostic disk in any available floppy disk drive.

2. Press any key except <Caps Lock> to bring the computer out of system sleep.

3. When the desktop appears, open the Control Panel desk accessory and click on the Portable icon. (You may need to scroll the icons to find the one for the Portable.) Click on the Internal Modem icon to highlight the button. Close the Control Panel.

4. Double-click the *ModemTest* disk icon to open the disk if it is not already open.

5. Double-click the *ModemTest* application icon to launch the program.

6. The Modem Selection window appears. Click **Intl'l XP 2400.**

   The Test Selections/Configuration window appears. After a slight delay while the program establishes communications with the modem, the modem configuration appears.

7. Select the tests to be run by clicking on the name of each test until an **X** appears in the box next to the test name.

8. If repeated testing of the modem is desired, click **Looping** until an **X** appears in the box.

9. If you want to save this setup for future use, click **Save Test Selections**.

10. Click **Start Tests** or press <Return> to begin testing. Click **Cancel** to return to the modem selection window.

Ring Detect Test

If you selected the Ring Detect test, you will need to connect the free end of the telephone cable when the Ring Detect test begins. You will be prompted to connect the cable at the proper time.

After the Ring Detect test begins and the telephone cable is connected, wait approximately 30 seconds before dialing the telephone number of the modem under test.

DAA Test

If you selected the DAA test, you will need to connect and disconnect the telephone cable from the DAA while the DAA test is running. The test indicates the state of the dial tone detect circuit as the telephone cable is connected and disconnected.

11. If testing is completed and all tests ran without error, the Test Results window displays the message **All selected tests passed**. If any problems are encountered, an Alert box indicates the type of failure and the module to be replaced.

12. If a printed copy of the test results is desired, click **Print**.

13. When you are finished using *ModemTest*, select **Quit** from the File menu.

❑ MODEMTEST REFERENCE

Illustrations Menu

Drawings of how to set up the Apple Data Modem 2400, Apple Personal Data Modem 2400, Int'l XP 2400, Data Access Arrangement (DAA), and MNP option board for testing are available under the Illustrations menu.

Test Selections/ Configuration Window

The Test Selections/Configuration window is used to select the tests to be run, to display various information about the modem being tested, to enable and disable looping (extended testing), and to save test selections.

Configuration Information

The right side of the Test Selections/Configuration window displays the ROM version of the modem selected. (The ROM version is not displayed for the Int'l XP 2400 modem.) If a Macintosh Portable is being used, the screen indicates the presence or absence of a Portable Data Modem 2400 or Int'l XP 2400, whether the modem or external serial port is selected in the Control Panel, and whether the automatic wake-up option is enabled. If an Int'l XP 2400 modem is being tested, then the DAA country code and status are indicated.

Keyboard Equivalents

These are the keyboard equivalents that may be used to invoke menu selections:

Menu Item	Keyboard Equivalent
Stop Testing	<Command>-.
Save Test Selections	<Command>-S
Quit	<Command>-Q

Installing ModemTest on a Hard Disk

Although it is possible to run *ModemTest* from a hard disk, Apple strongly recommends that you run *ModemTest* from a floppy disk. Using a floppy disk reduces the amount of hardware required to run the diagnostic. However, if you would like to run *ModemTest* from a hard disk, you should check the following:

1. *ModemTest* is not compatible with MultiFinder®. Change to Finder™ using **Set Startup** under the Special menu.

2. Remove any non-Apple-supplied INITs or desk accessories from the System Folder. Failure to do so could cause unreliable results or crashes.

3. You must have 12 point Monaco and 10 point Geneva fonts installed for *ModemTest* to display text correctly.

❑ TROUBLESHOOTING CHECKLIST

General

- If you are unable to establish communication with an internal modem, remove the modem from the Macintosh Portable for approximately five minutes. Then reinstall and retest the modem. If communication still cannot be established, substitute the modem being tested with a known-good modem and retest. If the substitute modem functions correctly, replace the modem. If communications cannot be established with a known-good modem, refer to "Troubleshooting" in Section 5, Additional Procedures, of the *Macintosh Portable Technical Procedures* for the Portable Data Modem 2400.

- If the icon for the internal modem is not displayed in the Portable CDEV when an internal modem is installed, the internal modem or the Portable main logic board is bad. To isolate the failure, try a known-good modem. If the internal modem icon now appears, the original modem is defective and should be replaced. If the icon still doesn't appear, replace the main logic board in the computer.

- If you are unable to establish communication with an Apple Data Modem 2400, verify that the serial cable is connected to the proper ports on the computer and on the modem.

Problems When Testing with ModemTest

- Internal modems should beep each time the Test Selections window appears, assuming the speaker volume is not set to **0**. If you do not hear a beep, first check the volume control setting in the Control Panel. If the volume is set to **1** or above, the modem is most likely defective. Replace the modem being tested with a known-good modem. If a known-good modem beeps when the Test Selections window appears, replace the original modem.

- If you are running the Ring Detect test in conjunction with other tests, be sure not to connect the telephone cable to the modem until the Ring Detect test begins. Connecting the cable while other tests are running can yield inaccurate results.

- If the cursor freezes when the Test Selections/Configuration window appears, replace the modem and retest. If the cursor still freezes, try a different computer.

Problems When Testing with AppleLink

- Verify that AppleLink is configured for 2400 baud or below.

- Verify that AppleLink is set up to use the correct serial port—the one the modem is connected to.

Apple Technical Procedures

Modems

Illustrated Parts List

❑ CONTENTS

IPL.3 Apple 300/1200 Modems (Figure 1)
IPL.5 Apple 300/1200 Modems – Cables and Connectors (Figure 2)
IPL.7 Apple Personal Modem and APM Modem Cables (Figure 3)
IPL.9 Apple Data Modem 2400 (Figure 4)

The figures and lists in this section include all piece parts that can be purchased separately from Apple for the Apple Personal Modem, along with their part numbers. These are the only parts available from Apple. Refer to your *Apple Service Programs* manual for prices.

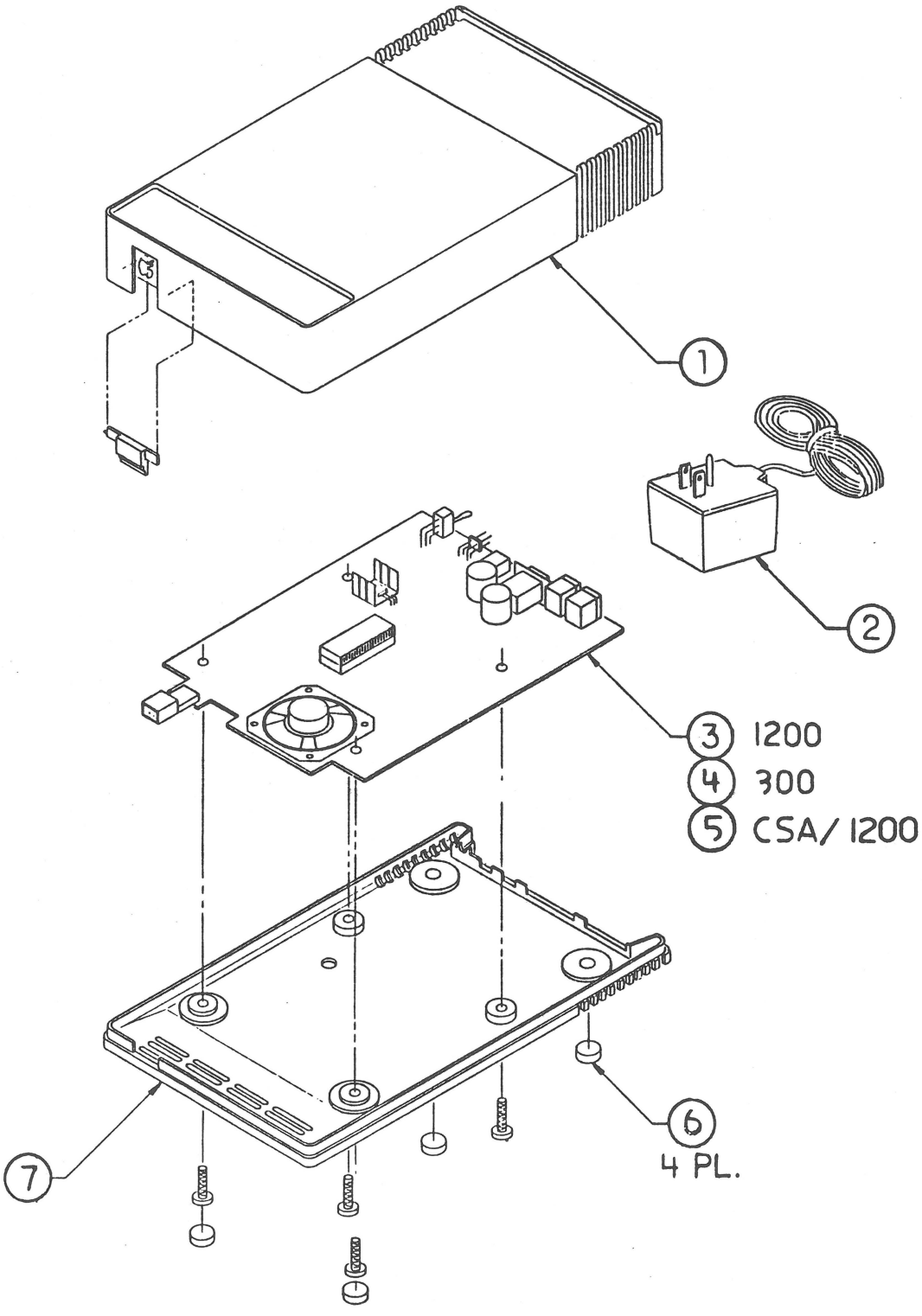

FIGURE 1

❑ APPLE 300/1200 MODEMS (Figure 1)

Item	Part No.	Description
1	815-0790	Top Cover
2	076-8077	Transformer, Cable Assembly
3	661-75164	PCB, Modem 1200
4	661-75165	PCB, Modem 300
5	661-0293	PCB, Modem 1200, w/CSA
6	865-0003	Rubber Foot
7	815-0791	Bottom Cover

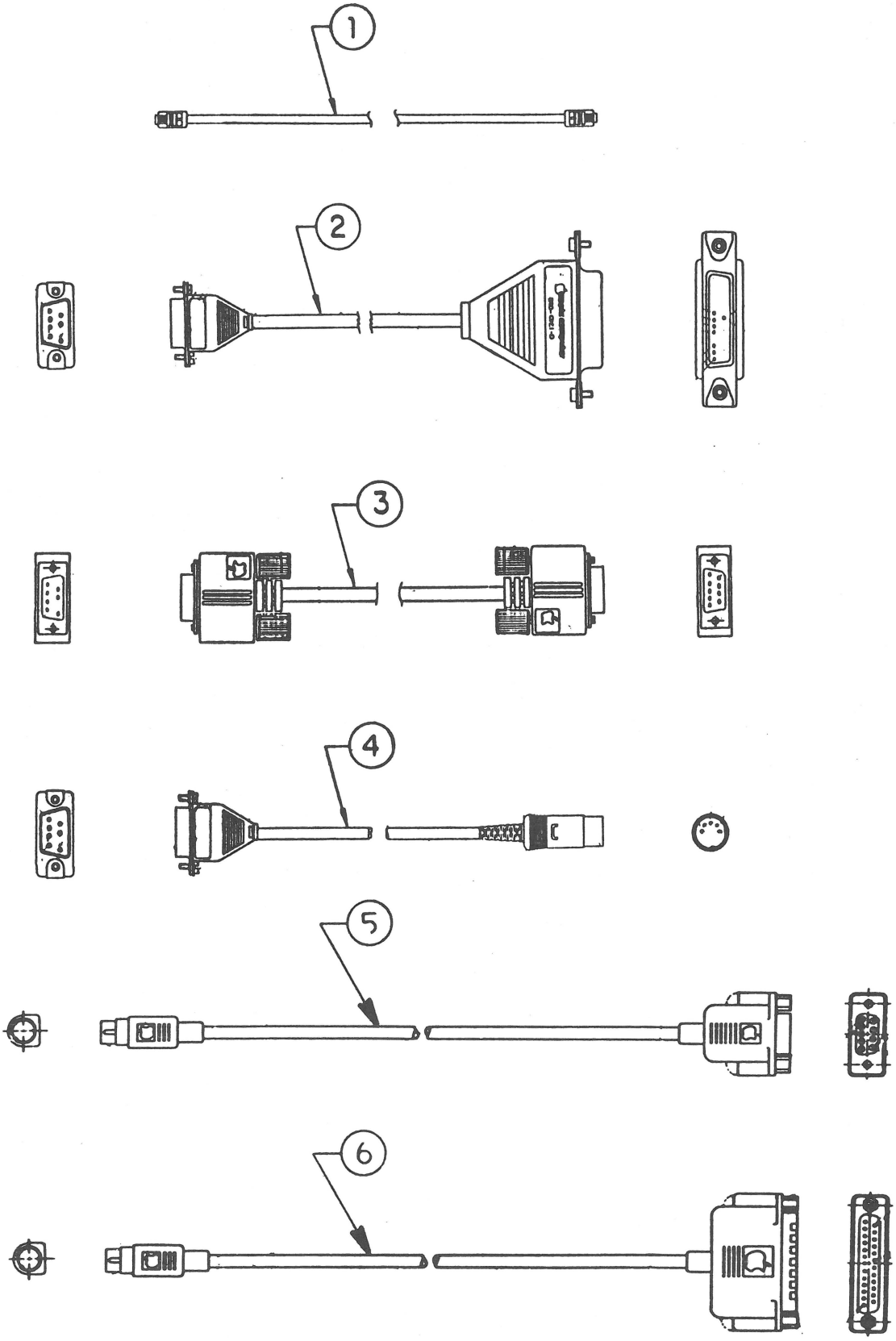

FIGURE 2

❑ APPLE 300/1200 MODEMS – CABLES AND CONNECTORS (Figure 2)

Item	Part No.	Description
1	076-8075	Cable Assembly, RJ-11
2	590-0121	Cable Assembly, Interface (II, III, Lisa/Macintosh XL)
3	590-0197	Cable Assembly, Interface (Macintosh)
4	590-0192	Cable Assembly, Interface (IIc)
5	590-0553	Cable Assembly, Macintosh Plus Peripheral Adaptor
6	590-0550	Cable Assembly, Apple IIGS Peripheral Adaptor

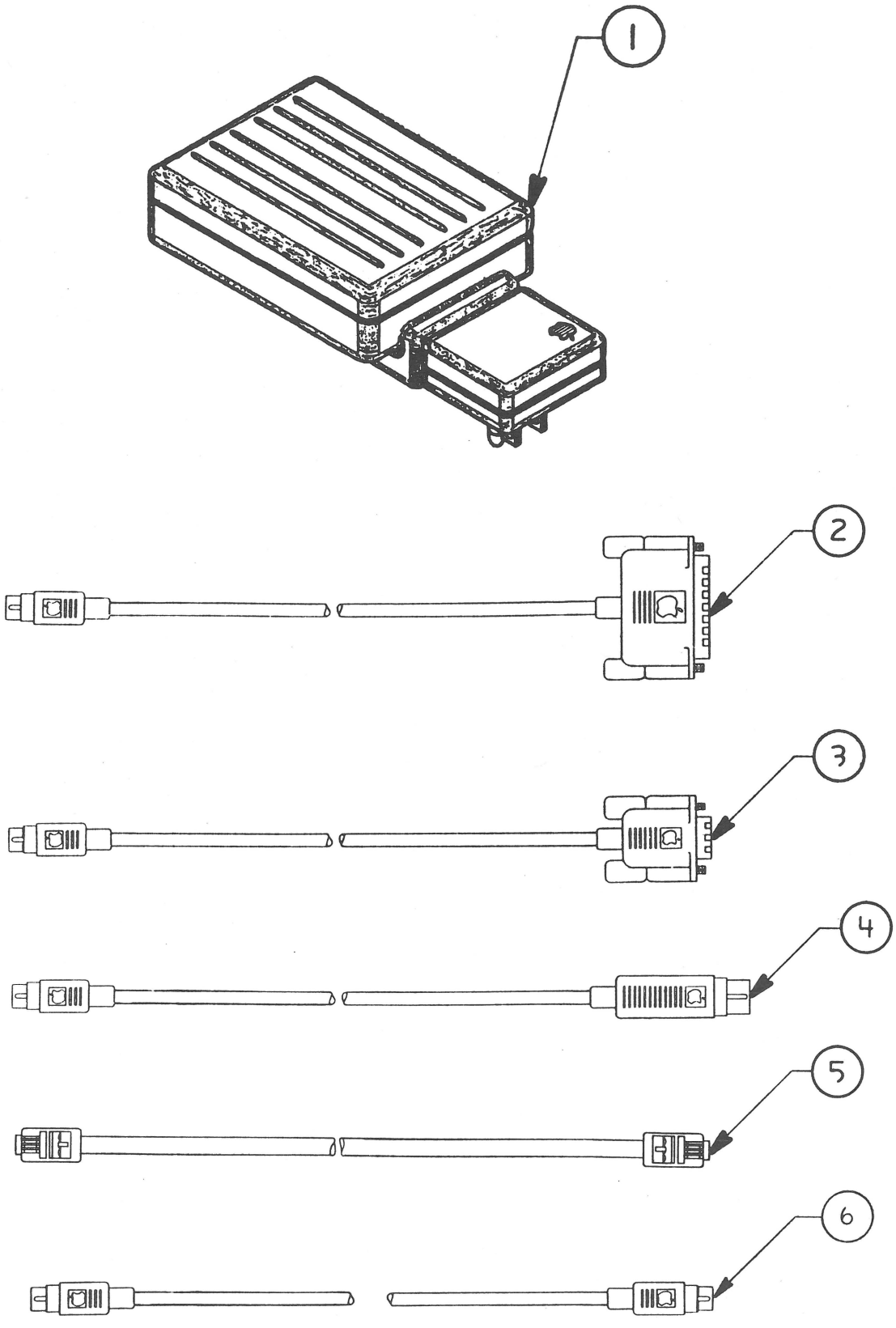

FIGURE 3

❑ APPLE PERSONAL MODEM AND APM MODEM CABLES (Figure 3)

Item	Part No.	Description
1	661-0313	Main Body, Apple Personal Modem (includes Power Connector)*
	933-0001	Plug Head, Power Connector (only)*
2	590-0555	Cable, APM to Apple II, II+, IIe, Apple III, Macintosh XL
3	590-0551	Cable, APM/ImageWriter II to Macintosh, Smoke
4	590-0554	Cable, APM/ImageWriter II to Apple IIc, Smoke
5	076-8075	Cable Assembly, RJ-11
6	590-0552	Cable, APM/ImageWriter II to Macintosh Plus, Smoke

* The whole-unit module includes the power connector. If desired, the power connector can be ordered separately.

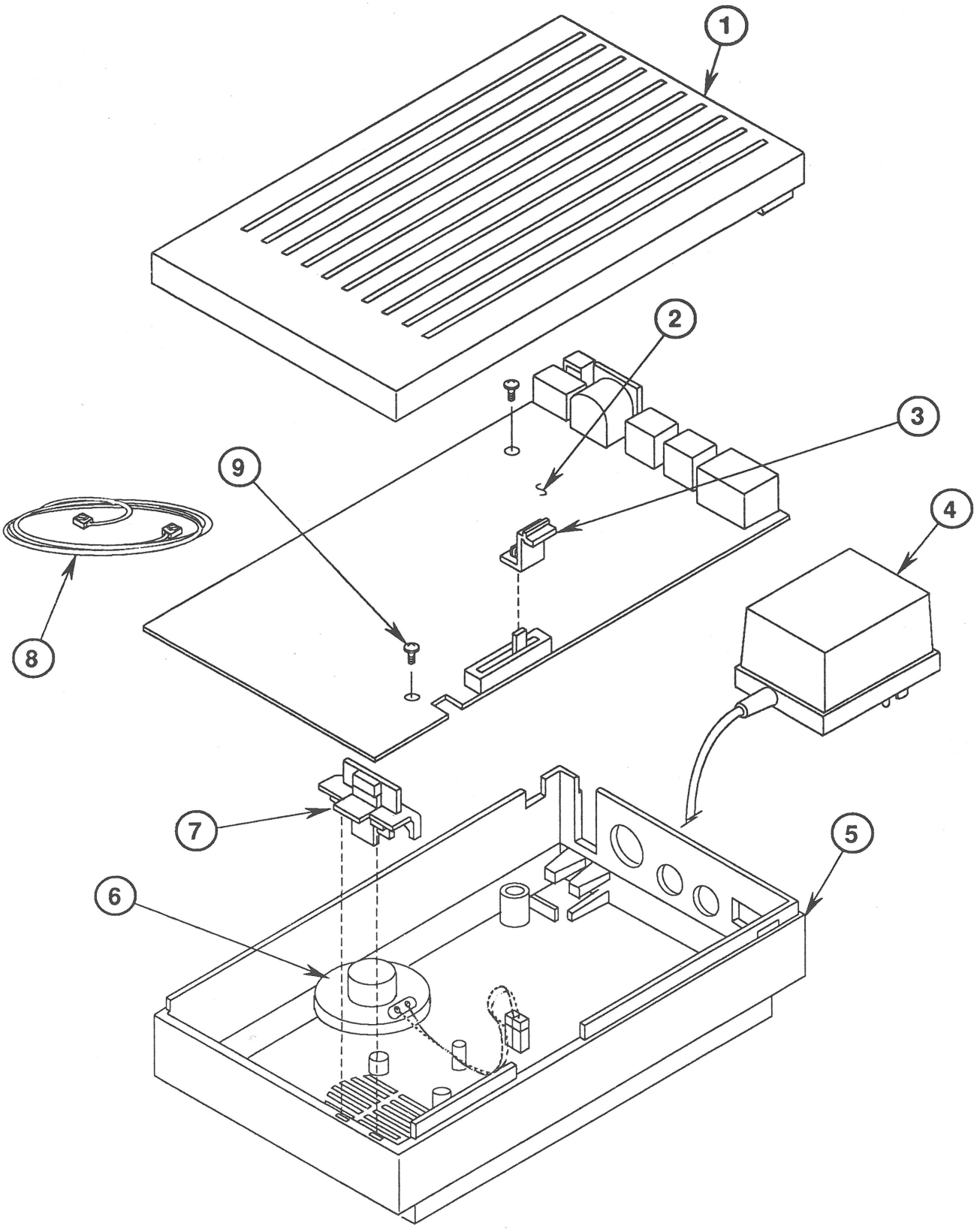

FIGURE 4

❑ APPLE DATA MODEM 2400 (Figure 4)

Item	Part No.	Description
1	815-5073	Top Case
2	661-0516	Main Logic Board
3	815-5076	Volume Lever
4	600-0455	Power Supply
5	630-5506	Bottom Case
6	600-0403	Speaker
7	630-5505	Light Pipe Assembly
8	590-0590	RJ-11 Cable
9	462-3100	Screw, M 3 x .5 x 6

Apple Technical Procedures

You Oughta Know...

Technical Procedures

❑ TABLE OF CONTENTS

Section 0 – Technical Procedures	0.2	How to Use the Technical Procedures
	0.2	Take-Apart
	0.2	Adjustments
	0.3	Diagnostics and Troubleshooting
	0.3	Using Troubleshooting Charts
	0.3	Summary
	0.4	Recommended Technical References
Section 1 – AppleLink	1.1	Information
	1.3	AppleLink HTS (Hardware Troubleshooting) Feedback Loop
Section 2 – Diagnostic Duplication	2.3	Introduction
	2.3	Diagnostic Chart
Section 3 – Keyswitch Replacement	3.3	Apple II, IIe, III, and Macintosh
	3.8	Apple IIc
	3.10	Apple DeskTop Bus Keyboards
Section 4 – Simplified Overview of a Microcomputer System	4.3	Introduction
	4.3	The Language That It Speaks
	4.4	Components and Functions
	4.7	Flow of Information
	4.8	Summary
	4.9	Glossary of Common Terms
Section 5 – Dot Matrix Technology	5.3	Introduction
	5.3	Matrix Printing
	5.4	How It Prints

Section 6 – Electrostatic Discharge (ESD)	6.2	Introduction
	6.3	ESD Preventive Rules
	6.4	Setting Up an ESD-Safe Workstation
Section 7 – Mouse Preventive Maintenance	7.2	Introduction
	7.3	Preventive Maintenance
	7.4	Take-Apart
	7.4	Cleaning
	7.4	Reinstallation
Section 8 – CRT Safety	8.2	Introduction
	8.3	Safety Precautions
	8.3	Safe Electrical Setup
	8.4	CRT Safety Rules
	8.6	Live Adjustment Rules
	8.7	Discharging the Cathode-Ray Tube
	8.8	Types of Discharge Tools
	8.9	Discharge Procedure
	8.12	Anode Cap
	8.13	Disposing of the Cathode-Ray Tube
	8.13	Devacuuming the CRT
Section 9 – Apple Module Symptom Codes	9.2	Introduction
	9.2	How to Use the Codes
	9.3	Example
	9.4	Code Explanations
	9.4	Macintosh/Lisa Logic Boards
	9.6	All Drives
	9.7	Apple II or Apple III Logic Boards
	9.8	Monitors/CRTs
	9.9	All Power Supplies
	9.10	All Printers
	9.11	Keyboards/ Mice/ Input Devices
	9.12	Modifier Codes
Section 10 — SIMM Removal Tool	10.2	Tool Adjustment
	10.3	Board Removal (vertical)
	10.4	Board Removal (angle)

©Apple Computer, Inc., 1987–1990. No portion of this document may be reproduced in any form without the written permission of Apple Computer, Inc.

Macintosh, Apple IIGS, AppleLink, Apple, and the Apple logo are registered trademarks of Apple Computer, Inc.

Section 9 — SIMM Removal Tool

9.2 SIMM Removal Tool
9.3 Tool Adjustment
9.4 Board Removal (vertical)
9.4 Board Removal (angle)

©Apple Computer, Inc., 1987–1990. No portion of this document may be reproduced in any form without the written permission of Apple Computer, Inc.

Macintosh, Apple IIGS, AppleLink, Apple, and the Apple logo are registered trademarks of Apple Computer, Inc.

Apple Technical Procedures

You Oughta Know...

Section 1 – Technical Procedures

❑ CONTENTS

1.2 How to Use the Technical Procedures
1.2 Basics
1.2 Take-Apart
1.2 Adjustments
1.3 Diagnostics
1.3 Troubleshooting
1.3 Additional Procedures
1.3 Illustrated Parts List
1.3 Summary
1.4 Recommended Technical References

❑ HOW TO USE THE TECHNICAL PROCEDURES

The *Apple Service Technical Procedures* are your major reference as an Apple Service specialist. The technical procedures are arranged by product, and under each product tab there are several sections of procedures. Most product tabs have Basics, Take-Apart, Diagnostics, and Troubleshooting sections and an Illustrated Parts List, and some also have Adjustments and/or Additional Procedures.

Each section and page is numbered within each tab division. At the bottom of each page the section number is given first, then the page number, and they are separated by a period. For example, page 2.5 of the *Apple IIGS Technical Procedures* is the fifth page of Section 2 (Apple IIGS Take-Apart). Each section begins with a table of contents so that you can find the procedure you need quickly.

Basics

The Basics section for each product gives a technical product description, often including the theory of operation. Most Basics sections also include care and handling instructions.

Take-Apart

The Take-Apart section for each product gives step-by-step procedures for removing and replacing individual assemblies or modules of that product. Suppose you have determined that the main logic board on a Macintosh IIcx is faulty. How do you find the replacement procedure? Turn to the *Macintosh IIcx* tab in the *Apple Service Technical Procedures* manuals. Find the Macintosh IIcx Table of Contents immediately behind the tab, and you'll see that Take-Apart is Section 2. (Both on this page and on page 2.1, you will find the table of contents for the Take-Apart section.) Looking at either table of contents, you see that take-apart instructions for the main logic board begin on page 2.22.

Adjustments

In the technical procedures for some products, there will also be an Adjustments section. If a module is malfunctioning, it may simply need an adjustment. The Adjustments section will tell you which adjustments can be made and how to make them. The procedures under the *AppleColor Hi-Res RGB Monitor* tab contain an example of an Adjustments section.

Diagnostics

For many products, there is a diagnostic disk which diagnoses some problems automatically. If a diagnostic tool exists for a product, there will be a Diagnostics section to tell you how to use it.

Troubleshooting

The Troubleshooting section contains flowcharts and/or symptom/cure charts that will help you isolate problems to a faulty or misadjusted module or part. The flowcharts assist you in logical troubleshooting by giving you a sequenced series of questions to answer and actions to try. Troubleshooting symptom/cure charts list specific symptoms and the causes of the symptom in order of likelihood.

Additional Procedures

Additional Procedures sections contain instructions for installing upgrades, retrofits, fuses, batteries, etc., and for correcting certain known hardware problems.

Illustrated Parts List

The Illustrated Parts List names the modules and replacement parts of the product, shows their locations on exploded diagrams, and gives their part numbers.

Summary

The Basics section gives you general technical information about the product. The Diagnostics and Troubleshooting sections help you find what's wrong with it. The Take-Apart and Adjustments sections tell you how to fix it. The Additional Procedures section tells you how to upgrade it. The Illustrated Parts List shows the parts by name and gives their part numbers.

Look over and, if possible, practice all the technical procedures for any new product before you repair it for a customer.

Note: Check your *Apple Service Programs* manual for the list of available videotapes that will assist you in performing technical procedures.

❑ RECOMMENDED TECHNICAL REFERENCES

Many technical manuals and owner's guides that are especially helpful to the service technician are available through the Apple Media Exchange Program. These manuals cover Apple hardware and systems software and utilities. Refer to the Media Exchange List in the *Apple Service Programs* manual for further details. The Media Exchange List is also available on AppleLink in the Service Info library (search on "media exchange").

Apple Technical Procedures

You Oughta Know...

Section 2 – AppleLink

❑ CONTENTS

2.2 Introduction to AppleLink
2.3 Technical Info Library – Hardware Troubleshooting
2.3 The HTS Identifier
2.3 What To Do
2.4 Technical Assistance Request (TAR) Form
2.4 Increasing the Efficiency of HTS
2.5 Technical Assistance Request Form

❑ INTRODUCTION TO APPLELINK

AppleLink is a worldwide electronic communications and information system for Apple's employees and business partners. (If your service organization is not registered on AppleLink, check with your Apple sales representative for registration information.)

There are two main formats for AppleLink information: bulletin boards and libraries. You can see the difference by looking at the icons on the AppleLink main menu screen. Read-only bulletin board icons look like the front page of a newspaper. Read-write bulletin board icons look like notices posted on a bulletin board. Library icons look like books on a shelf.

Bulletin boards contain regularly updated information on products, activities, pricing, policies, and events.

Libraries are searchable databases that contain reference information about products and programs. The library you will probably want to use most often is the Technical Info library. (For information on how to access hardware troubleshooting articles from the Technical Info library, please see the next page.)

Information available under the News and ALink icon can help orient new users to the AppleLink system. If you're having trouble using AppleLink, call the AppleLink HelpLine at (408) 973-3309 (Monday through Friday from 7:00 AM to 5:00 PM Pacific Standard Time) or AppleLink your questions to ASK.HELPLINE.

❑ TECHNICAL INFO LIBRARY – HARDWARE TROUBLESHOOTING

The HTS Identifier

When you open the Technical Info library, you see a screen where you can enter a search string (a word, code, or phrase) that will access all articles containing that string. All Technical Info library articles relating to hardware troubleshooting are coded with the mnemonic HTS, so you can use that code to help you find the troubleshooting information you need quickly.

HTS is one of several search-string identifiers that can help focus your search for library articles. Other identifiers within the HTS domain are listed below:

CNFG (Configuration): This identifier is attached to all HTS articles containing configuration information. This may include DIP switch settings, interface cable pinouts, and explanations to help you perform configuration tasks.

P/C (Problem/Cure): This identifier is attached to all HTS articles that describe specific problems with various products and suggest the most frequently effective cure. This information can save much time and effort in troubleshooting.

GTS (General Troubleshooting): The "General Troubleshooting" document for each product is usually a step-by-step procedure to help you isolate a hardware problem to the malfunctioning replaceable part.

P/M (Preventive Maintenance): Articles coded with this identifier provide hints, practices, and procedures to increase the product's operability and mean time between failures.

Other useful search words are:

PINOUT
DIP

What To Do

From the search screen in the Tech Info library enter HTS, the product name, and any other appropriate mnemonic or search word (all separated by the word and), and click on **Search Library** to obtain the exact information that you want. For example, to find print quality corrections for the ImageWriter LQ, use:

"HTS and ImageWriter LQ and print quality"

From the list of applicable articles, select one or more titles that you can directly associate with your specific problem. If none of the titles seem to fit your problem, perform the product's General Troubleshooting procedure to help you isolate the problem.

If using HTS in your search does not yield the information you are looking for, eliminate HTS and use other logical search words. It could be that what you're searching for might not be hardware in nature (though it may appear to be!) and therefore, would not appear under the HTS code.

Technical Assistance Request (TAR) Form

A Technical Assistance Request (TAR) form (see example on the following page) appears in all HTS searches. If you are unable to locate information you need, download the form, fill it out, and AppleLink it to your technical support AppleLink address. Apple's technical support persons will respond with an AppleLink mail message.

Increasing the Efficiency of HTS

When you solve a problem that was particularly difficult or that recurs frequently, send in the problem and solution via the TAR form. Apple will put your contribution into an HTS document on AppleLink and give you credit with a byline. Or perhaps you have a need for information that you think should be in the HTS domain on AppleLink. Use the TAR form to send in a list of titles for these articles and explain why the information is needed.

Technical Assistance Request Form (TAR)

USE THIS FORM WHEN REQUESTING TECHNICAL ASSISTANCE.

In order to support you more quickly and efficiently, we request that you submit your queries using this form. The answer will be returned to the same address from which the request was sent. Please SAVE the form to your AppleLink disk so it will be available when you are not connected to the network.

When you fill in your form, please do NOT block format as shown below:

System: Apple IIe Enhanced

Problem: After printing a file, user quits from AppleWorks (no
save or further actions). Upon....

INSTEAD, please use the following format (all unnecessary spaces removed):

System: Apple IIe Enhanced

Problem: After printing a file, user quits from AppleWorks (no save or further actions). Upon...

We would be very grateful if you would also use this form to share valuable technical information YOU'VE discovered while working with Apple products!

DELETE ALL INFORMATION ABOVE; SAVE THE FORM BELOW.

TECHNICAL ASSISTANCE REQUEST FORM
(When complete, send to your Tech Support address.)

DATE:
REQUESTOR:

SYSTEM (memory, enhanced/unenhanced, # of drives, peripherals, etc.):

SOFTWARE (version number):

DESCRIBE THE PROBLEM/SYMPTOMS:

ATTEMPTS (what have you tried? the results?):

BEST GUESS (possible cause, possible solution):

REPLY FROM APPLE TECH SUPPORT:

FOR APPLE INTERNAL USE ONLY:

Apple Technical Procedures

You Oughta Know...

Section 3 – Keyswitch Replacement

❑ CONTENTS

3.3 Keyswitch Replacement for Apple II, IIe, III, and Macintosh
3.8 Keyswitch Replacement for Apple IIc
3.10 Keyswitch Replacement for Apple DeskTop Bus Keyboards

Note: Keyswitch identification and keyboard exchange information for the Apple II, IIe, III, and Macintosh is given in Appendix A of the technical procedures for each product.

❑ KEYSWITCH REPLACEMENT–APPLE II, IIe, III, AND MACINTOSH

Materials Required

Soldering iron (60 watt, 700 degrees)
Solder sucker
60/40 resin core solder
#1 Phillips screwdriver

Apple II's have keyboards with three different types of keyswitches: those that screw on, those that snap on, and those that cannot be replaced.

Information

1. Screw-on switches are on keyboards that have both screws and traces on the underneath side of the board of the mechanical assembly.

2. Snap-on switches are on keyboards that have traces but no screws on the underneath side of the board of the mechanical assembly.

3. Keys that are not replaceable are on the newest keyboards which have screws but no traces on the underneath side of the board of the assembly. If any switch fails, you replace the entire mechanical assembly.

Screw Fastened Switches

Procedures for changing a keyswitch screw fastened switch are noted below.

Removing the Keyswitch

1. To determine which key you want to remove, look at Figure 1 and find the number corresponding to the desired key. Locate that number on the back of the keyboard.

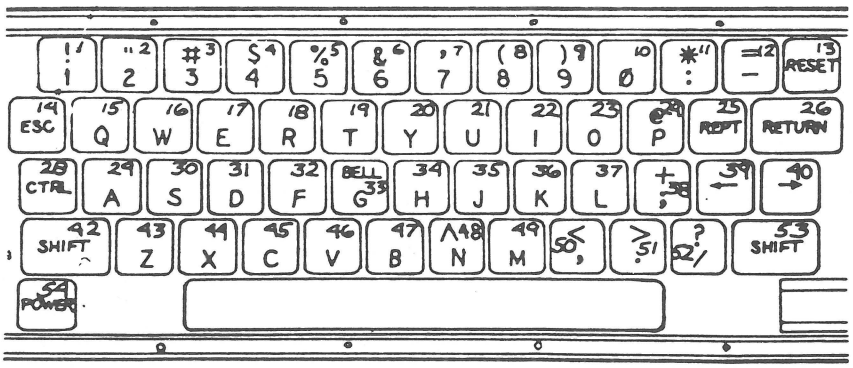

FIGURE 1

2. Prepare the solder sucker by pushing the plunger down as far as it will go.

3. Heat the soldering iron and make sure it is clean and well-tinned.

4. When the soldering iron is ready, put a small drop of fresh solder on each connection. this will facilitate melting and removal of the old solder.

5. Hold the soldering iron and the solder-sucker as shown in Figure 2. The tip of the iron should be firmly in contact with both the pin and the pad at the base of the pin.

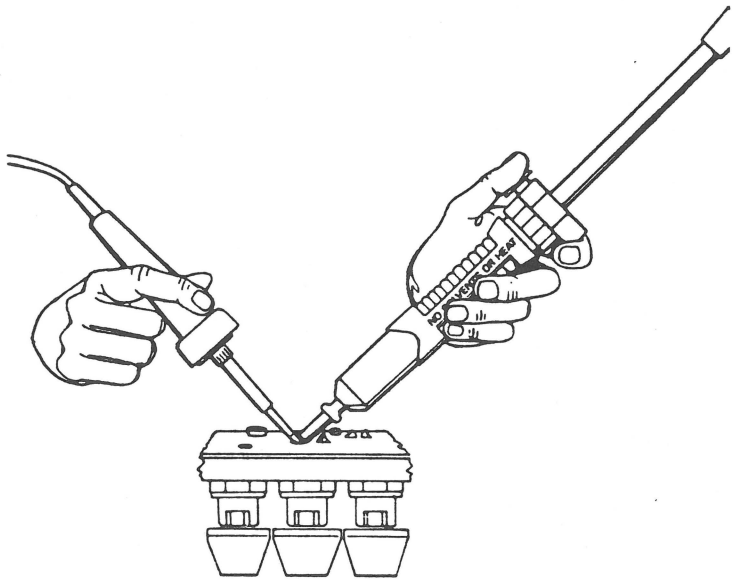

FIGURE 2

6. When the solder melts, quickly remove the iron, place the solder sucker vertically over the connection, and push the release button or lever to pick up the solder.

CAUTION: *In the following steps, do not apply the soldering iron for more than three seconds. It may lift the traces off the board and destroy it.*

7. Repeat this procedure for the second pin, being careful to observe the 3-second limit.

8. If any solder remains around the base of the pin, apply a little solder to the joint and repeat steps 5 & 6 to make sure all solder is removed.

9. Remove the screw holding the keyswitch to the board.

10. Turn the keyboard right-side up and pull up on the key cap to remove the switch assembly.

Installing the Switch

11. Insert the keyswitch into the board so that pins go through the holes.

12. Holding the key in place with one hand, turn the keyboard upside-down onto the pad.

13. Reinstall the screw that holds the key in place.

14. Apply a little solder to the iron. Then, with the tip in contact with both the pin and the pad that surrounds the pin hole, apply the new solder.

CAUTION: *In the following steps, do not overheat the board!*

15. Check the joint to be sure that the solder has completely filled the hole around the pin and that the solder is built up in a little cone around the pin. If the joint is not filled, apply more solder.

Snap On Keys

Procedures for changing a keyswitch snap on keys.

Removing the Keyswitch

1. Locate the desired key. (See Figure 3.)

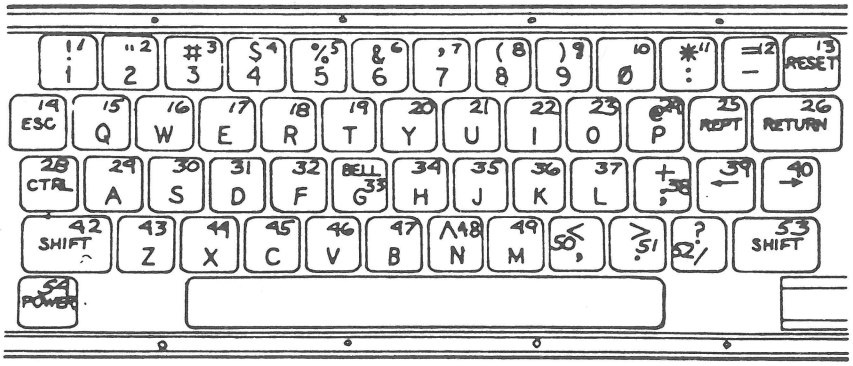

FIGURE 3

2. Put a little resin core solder on the joints.

3. Cock the solder sucker by pushing the plunger down as far as it will go.

4. Hold the soldering iron and the solder sucker as shown in Figure 4. The tip of the iron should be firmly in contact with both the pin and the pad at the base of the pin.

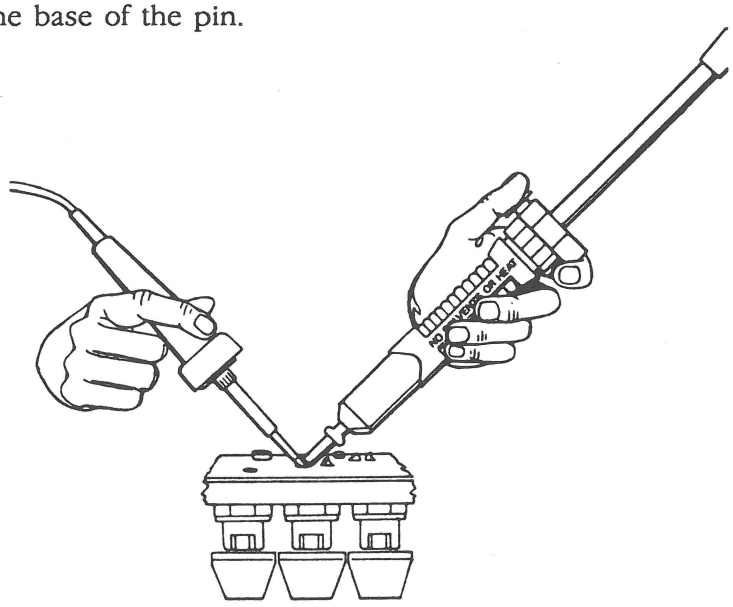

FIGURE 4

CAUTION: *In the following steps, do not apply the soldering iron for more than three seconds. It may lift the traces off the board and destroy it.*

5. When the solder melts, quickly remove the iron, place the solder sucker vertically over the connection, and push the release button or lever to pick up the solder. Make sure that all the solder is removed.

6. Repeat this procedure for the second pin. Be careful to observe the three second limit.

7. If any solder remains around the base of the pin, apply a little solder to the joint and repeat steps 4-6 to make sure all solder is removed.

8. Turn the keyboard over.

9. Take the key cap off.

10. With one pair of needlenose pliers, pinch the two clips on the keyswitch together.

11. With the other pair of needlenose pliers, remove the keyswitch.

Installing the Switch

12. Thread the pins of the keyswitch through the holes.

13. Snap the switch into place.

14. Replace the keycap.

***CAUTION:** In the following steps, Do not overheat the board!*

15. Solder the pins into place. Apply a little solder to the soldering iron. With the tip in contact with both the pin and the pad that surrounds the pin hole, apply the new solder.

16. Check the joint to be sure that the solder is built up in little cone around the pin. If the joint is not filled, apply more solder.

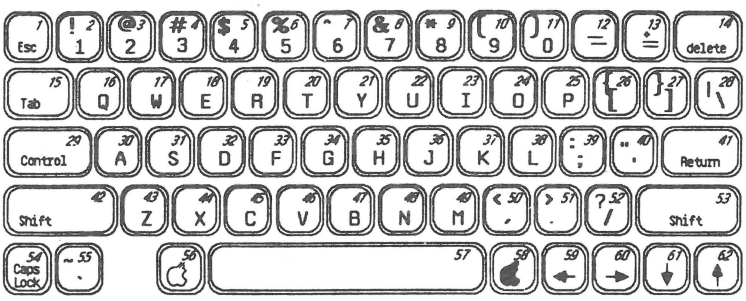

FIGURE 5

❑ KEYSWITCH REPLACEMENT–APPLE IIc

Materials Required

Medium Phillips screwdriver
Small (jeweler's) flatblade screwdriver
Soldering iron
Solder sucker
Needlenose pliers
X-acto knife
60/40 resin core solder

Note: On the keyboards in some early systems, keycaps are bonded to their keyswitch. You will not be able to repair individual keyswitches on those keyboards. Send them back to Apple for repair.

Removing a Keyswitch

Some newer Apple IIc's have ALPS keyboards, which are slightly different from other IIc keyboards. Steps where these differences matter are marked with an asterisk (*).

1. Remove the keyboard from the IIc. (See **Apple IIc Technical Procedures.**)

2. Using Figure 5, locate the number of the keyswitch to be replaced. If the keyswitch solder pads are covered by the stabilizer bar (on the underside), remove the bar by squeezing the plastic prong (between the circuit board and the stabilizer bar at each end) with needlenose pliers.

3. Remove the keycap by gently lifting up with a screwdriver on one of the four sides.

*4. Remove as many of the surrounding keycaps as necessary until the plastic overlay can be peeled back from the edge far enough for the selected keyswitch to be removed without damaging the plastic.
   * There is no plastic overlay on the ALPS keyboard.

*5. Turn the keyboard over and locate the number of the keyswitch to be replaced. There are four connections for the keyswitch, two to the lower left of the number and two to the upper right of the number.
   * There are two connections for each ALPS keyswitch.

6. Apply fresh solder to each of the four keyswitch connections to be desoldered. This transfers heat through the connection faster, making it easier to desolder.

7. Desolder the keyswitch contacts. If any solder is left, use needlenose pliers and gently wiggle the keyswitch pins until the keyswitch can be easily removed.

*8. Peel the plastic overlay back and remove the keyswitch.
   * There is no plastic overlay on the ALPS keyboard.

Installing a Keyswitch

*1. Look at the bottom of the keyswitch and notice the plastic leg on one corner.
   * There is no plastic leg on the ALPS keyboard.

   Note: There is only one way for the keyswitch to fit flush against the circuit board.

*2. Peel back the plastic overlay and position the pins and plastic leg of the keyswitch into their holes. Pop the keyswitch into position.
   * There is no plastic overlay on the ALPS keyboard.

3. Turn the board over and check that the plastic leg is in its hole. Otherwise, the key will not fit flat nor work properly.

4. Lay the plastic cover back into position and replace the keycaps.

5. Solder the pins into place.

CAUTION: *While heating both surfaces with the soldering iron, hold the solder against the point where the pin and the pad touch. The heat from the pin and the pad, not the soldering iron, should melt the solder.*

6. Check the joint to be sure that the solder is built up in a little shiny cone around the pin. If the joint is not filled, apply more solder.

7. If the stabilizer bar was removed, replace it by inserting the plastic prong in the middle hole on each side of the board.

❑ KEYSWITCH REPLACEMENT–APPLE DESKTOP BUS KEYBOARDS (ALPS KEYSWITCHES)

Materials Required

Medium Phillips screwdriver
Small (jeweler's) flatblade screwdriver
Soldering iron
Solder sucker
Needlenose pliers
Exacto knife
60/40 resin core solder

Removing a Keyswitch

1. Remove the keyboard from the case. (See the technical procedures for the specific keyboard.)

2. Remove the keycap by gently lifting up with a screw-driver on one of the four sides.

3. Turn the keyboard over. Using the keyswitch map (Figure 6), locate the number of the keyswitch to be replaced. There are two connections for each keyswitch.

4. Apply fresh solder to each of the two keyswitch connections to be desoldered. (Adding the fresh solder creates a mixture that transfers heat through the connection faster, making it easier to desolder.)

5. Use the solder sucker to desolder the keyswitch contacts. If any solder is left, use needlenose pliers and gently wiggle the keyswitch pins until the keyswitch can be easily removed.

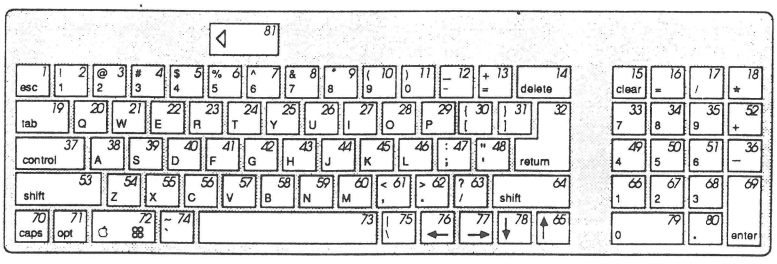

FIGURE 6

Installing a Keyswitch

1. Position the pins of the keyswitch into the appropriate holes on the keyboard and press in.

2. Solder the pins into place.

CAUTION: *While heating both surfaces with the soldering iron, hold the solder against the point where the pin and the pad touch. The heat from the pin and the pad, not the soldering iron, should melt the solder.*

3. Check the joint to be sure that the solder is built up in a little shiny cone around the pin. If the joint is not filled, apply more solder.

4. Replace the keycap.

5. Replace the keyboard into the case. (See the technical procedures for the specific keyboard.)

Apple Technical Procedures

You Oughta Know...

Section 4 – Diagnostic Duplication

❑ CONTENTS

4.2 Introduction
4.3 Diagnostic Chart
4.3 Apple II Family Diagnostics
4.4 Macintosh Diagnostics
4.5 Macintosh Peripherals Diagnostics
4.5 Network Diagnostics

❑ INTRODUCTION

Nearly all Apple diagnostics are copyable, but there are a few which are copy-protected. If an attempt is made to duplicate a copy-protected disk, there is a good chance that the original will be damaged.

The following chart lists the diagnostic, tells if it is copyable, and gives the program or utility that will perform the copy.

❑ DIAGNOSTIC CHART

IMPORTANT: *When copying diagnostics from the Finder, be sure to copy the entire disk. The diagnostic disks contain specific versions of the System and Finder and are not guaranteed to run with other versions. Use 800K or larger disks. For more information, turn to the Diagnostics section for the product in the appropriate* Apple Service Technical Procedures *binder.*

Apple II Diagnostics	Duplication Information
Apple II Product Diagnostics, Rev. B (5.25")	Copyable using DOS 3.3 (COPYA)
Apple II Peripheral Diagnostics (5.25")	Copyable using DOS 3.3 (COPYA)
Apple II SCSI Diagnostic 2.1 (5.25" and 3.5") – contains:	
• *Hard Disk Test 1.0*	Copyable using System Utilities (2.1.1 or higher)
• *SCSI Card Test 2.1*	Copyable using System Utilities (2.1.1 or higher)
Apple IIe, IIc Diagnostic 4.0 (5.25")	Copyable using System Utilities (2.1.1 or higher)
Apple IIe, IIc, IIc Plus, IIGS Diagnostic 4.0 (3.5")	Copyable using System Utilities (2.1.1 or higher)
Apple IIGS Diagnostic 4.0 (5.25")	Copyable using System Utilities (2.1.1 or higher)
ProFile Limited Data Recovery Program 2.0	Copyable using DOS 3.3 (COPYA)
Apple II Video Overlay Card Diagnostic 1.0	Copyable using System Utilities (2.1.1 or higher)
Apple 5.25 Floppy Drive Test Assy 1.0 – contains:	
• *Apple 5.25.Floppy Drive Test 1.0*	Copyable using System Utilities (2.1.1 or higher)
• *Apple 5.25 Drive Test Reference Disk 1.0*	Not copyable (when a disk needs replacing, you can exchange it through the Media Exchange Program)

Macintosh Diagnostics	Duplication Information
MacTest 7.0	Copyable only with special copy program (see "Backup Procedure" in Section 3, Diagnostics, of the *Macintosh and Macintosh Plus Technical Procedures)*
MacTest SE 3.0	Copyable from the Finder
MacTest SE/30 1.0	Copyable from the Finder
MacTest IIcx/IIci 2.0	Copyable from the Finder
MacTest II/IIx 3.1	Copyable from the Finder
MacTest IIfx 1.0	Copyable from the Finder
AppleCAT/MacTest Portable1.0	Copyable from the Finder
AppleCAT SE 3.0	Copyable from the Finder
AppleCAT SE/30 1.1	Copyable from the Finder
AppleCAT II/IIx 2.4	Copyable from the Finder
AppleCAT IIcx/IIci 2.0	Copyable from the Finder

Macintosh Peripherals Diagnostics	Duplication Information
AppleCAT LaserWriter 1.1	Copyable from the Finder
Macintosh Hard Disk Test 2.0	Copyable from the Finder
Macintosh Peripheral Tests 4.3 – contains:	
• *ScanTest 2.0*	Copyable from the Finder
• *FaxTest 1.2*	Copyable from the Finder
• *AppleCD Test 1.1*	Copyable from the Finder
• *PrintTest LQ 1.3*	Copyable from the Finder
Macintosh Peripheral Tests, Vol. II – contains:	
• *LaserWriter II NT/NTX ROM and SIMM Test 1.0*	Copyable from the Finder

Network Diagnostics	Duplication Information
ConnectTest 1.0	Copyable from the Finder
ModemTest 1.0	Copyable from the Finder

Apple Technical Procedures

You Oughta Know...

Section 5 – Apple Module Symptom Codes

❑ CONTENTS

5.2 Introduction
5.2 How to Use the Codes
5.3 Symptom Codes
5.3 Logic Board – Startup and Run Problems
5.4 Logic Board – Video and Sound Problems
5.4 Logic Board – Input/Output Device Problems
5.5 Logic Board – Disk I/O Problems
5.5 Logic Board – Miscellaneous Problems
5.6 All Monitors – CRT and Analog Boards
5.7 All Drives
5.8 All Power Supplies
5.9 Keyboards, Mice, Input Devices
5.10 All Printers
5.11 Modifier Codes
5.12 Examples

❑ INTRODUCTION

The Apple Module Symptom Codes were designed to assist Apple in improving the quality of products. The codes are entered on the Service Repair Order (SRO) forms and sent back to Apple. By analyzing the data, we can track trends and address problems. This data enables Apple to better serve you and your customers.

❑ HOW TO USE THE CODES

The module symptom codes are for module (not system) failures. The codes, which represent the symptom that the defective module is exhibiting, have two parts:

- A three-digit symptom code that describes the problem caused by the defective module
- A one-digit modifier code that tells how often the module fails, when it fails, or why it fails

To use the codes,

1. On the *Quick Reference: Apple Module Symptom Codes* card, locate the symptom that describes the problem the module is exhibiting. Note the associated three-digit code.

2. Select the appropriate one-digit modifier code. If more than one modifier code applies, use the higher number. Place this number after the the three-digit symptom code.

3. Write the four-digit code on the SRO form.

Let's take a look at an example of a failure you may see. A Macintosh II logic board will not start up from an internal 800K floppy disk drive with a known-good bootable disk. The system will start up from the internal SCSI drive. This failure always happens.

The symptom number is 359, "Won't boot; reads/writes OK." The failure is "Continuous," so the modifier code is 1. The code entered on the SRO form is 3591.

❑ SYMPTOM CODES

The following provides further explanation of each symptom description on the quick reference card. The codes are listed by module and in numeric order.

Logic Board – Startup and Run Problems

The following symptom codes describe start-up and run problems that may be exhibited by the logic board. These symptom codes are numbered between 150 and 156.

Number	Explanation
150	"Bad or no start up tone" – The logic board plays a startup tone that indicates the logic board is bad.
151	"No Mac face; screen bright" – The display shows neither characters nor a Macintosh face. The startup tone may or may not occur.
152	"Sad Mac; self-test fails; startup error" – A sad Mac face with or without numbers appears during startup, the self-test fails, and/or some other system error occurs during startup.
153	"System bombs or crashes" – The system shows system bombs and/or errors or locks up during normal use. The system did not fail during startup.
154	"No power light indicator with good power supply" – No power light comes on when a known-good power supply is connected.
155	"Restarts or shuts down randomly" – The system resets itself unexpectedly.
156	"Can't shut down" – The system doesn't respond or crashes during a menu-driven shutdown.

Logic Board – Video and Sound Problems

The following symptom codes describe video and sound problems that may be exhibited by the logic board.

Number	Explanation
160	"Bad or no color on display" – The system appears to be functioning properly except that the video image has bad or no color (including grayscale) when a known-good color monitor is connected. The image looks OK when displayed in monochrome (black and white).
161	"Distorted or no video; system boots OK" – The system appears to be functioning properly except that the video image is either distorted or there is no video image at all.
162	"Distorted or no sound; system boots OK" – The system appears to be functioning properly except that there is no sound or the sound is distorted or crackling.

Logic Board – I/O Device Problems

The following symptom codes describe I/O device problems that may be exhibited by the logic board.

Number	Explanation
170	"Bad or no response (keyboard, mouse, trackball...)" – A known-good input device produces wrong characters, erratic movement, or no response at all (not for Apple II game port).
171	"Bad or no response from game paddle/joystick" – A known-good game paddle or joystick produces no response or a bad response through the game port.
172	"Serial port failures" – The serial loopback test fails or other general problems with the serial ports.
173	"Printing or AppleTalk problem" – A problem occurs during printing or during built-in AppleTalk communication. The problem could be with the printer port or printer interface cards. The printer port passes serial loopback tests.
174	"Communications or modem port problem" – A problem occurs during modem use or another communications error occurs. The problem could be with the modem port or serial communication peripherals. The modem port passes the serial loopback tests.
175	"Bad expansion slot (Apple II, Direct, NuBus, ...)" – One or more expansion slots do not function correctly.

Logic Board – Disk I/O Errors

The following symptom codes describe disk I/O problems that may be exhibited by the logic board.

Number	Explanation
180	"Can't boot/read internal floppy disk" – The system doesn't boot from, recognize, or read an internal floppy disk.
181	"Can't boot/read external floppy disk" – The system doesn't boot from, recognize, or read an external floppy disk.
182	"Can't write/format internal floppy disk" – The system can't write to or format an internal floppy disk.
183	"Can't write/format external floppy disk" – The system can't write to or format an external floppy disk.
184	"Can't boot/read internal SCSI drive" – The system doesn't boot from, recognize, or read an internal hard disk.
185	"Can't boot/read external SCSI drive" – The system doesn't boot from, recognize, or read an external hard disk.
186	"Can't write/format internal SCSI drive" – The system can't write to or format an internal hard disk.
187	"Can't write/format external SCSI drive" – The system can't write to or format an external hard disk.

Logic Board – Miscellaneous Problems

The following symptom codes describe miscellaneous problems that may be exhibited by the logic board.

Number	Explanation
190	"Control Panel settings don't work" – Control panel settings aren't remembered when the power is turned off; no or bad response after setting an option.
191	"Connector or jack problems" – A broken or damaged connector is causing problems.
192	"SIMM socket problems" – A broken or damaged SIMM socket is causing problems.
193	"Board is cracked, damaged" – The board is cracked or otherwise damaged.
194	"Bad battery" – The battery is bad, corroded, or defective.

All Monitors – CRT and Analog Boards

The following symptom codes are for all monitor modules except monitor power supplies and all Macintosh built-in CRTs. These symptom codes are between 250 and 263.

Number	Explanation
250	"Black screen" – No picture displays on the screen, but the power light is on.
251	"Vertical bright line" – A bright vertical line displays in the middle of the screen.
252	"Horizontal bright line" – A bright horizontal line displays in the middle of the screen.
253	"Rolls vertically" – The screen display rolls vertically.
254	"Diagonal stripes" – The screen display has diagonal stripes.
255	"Dim or low intensity" – The display is OK, but the picture is dim. The brightness adjustment does not correct the problem.
256	"Fuzzy screen; unclear characters" – The display is unclear and is difficult to read.
257	"Unstable picture; logic board OK" – The picture jumps vertically or horizontally or fades in and out. The logic board is OK.
258	"Incorrect picture size or alignment" – The size of the screen is wrong or the alignment of the screen is off. Adjustments do not correct the problem.
259	"Lighted screen, no picture" – The display is bright, but no picture is evident.
260	"Fan not spinning" – The internal fan does not come on.
261	"Color not adjustable; no color" – The color cannot be adjusted, or no color is evident on the screen.
262	"Distorted sound" – Sound is not present, or static is evident.
263	"No power; no raster" – The monitor is dead.

All Drives

The following symptom codes are for all drive modules, as applicable, except the power supply modules. The drives include all storage devices, (SCSI hard disks, floppy drives, CD-ROMs, etc.). These symptom codes are between 350 and 365.

Number	Explanation
350	"Won't eject" – The floppy drive will not eject the disk.
351	"Won't format" – The drive will not format or initialize the media used.
352	"Disk does not spin" – The drive does not spin or come up to speed.
353	"Too many bad blocks" – The hard disk has more than the "safe" number of bad blocks on the disk.
354	"Won't mount" – The drive will not mount.
355	"Won't recognize disk formatted on other drive" – The drive formats OK, but media that has been formatted on other drives appears as unformatted to the drive being tested.
356	"Won't read/write data; disk spins" – The drive spins or comes up to speed but will not read and/or write data.
357	"Won't write data" – The drive reads OK but will not write data.
358	"Excessive read/write errors" – The drive consistently has many read/write errors. For floppy disks this situation is apparent when a known-good disk cannot be read consistently. On a hard disk this situation is apparent when information can be retrieved only sporadically.
359	"Won't boot; reads/writes OK" – The drive will not boot but will read and write information.
360	"Excessive seeking" – The drive is repeatedly seeking when not being accessed by the computer.
361	"Icon doesn't appear on desktop; formats OK" – On reboot, the disk icon fails to appear on the desktop.

All Drives, Continued

Number	Explanation
362	"Won't format; able to see drive in SC Setup" – The drive is seen in SC Setup, but the drive will not format.
363	"Won't format; unable to see drive in SC Setup" – The drive is not seen by SC Setup, and the drive will not format.
364	"Unable to access drive; system folder present" – The drive has been formatted (initialized) and the system folder installed, but the computer is still unable to access the drive; the drive does not reboot.
365	"Noisy; works OK" – The customer complained about the noise of the drive; there is no other problem.

All Power Supplies

The following symptom codes are for all power supplies. These symptom codes are between 450 and 455.

Number	Explanation
450	"Clicking noise" – The power supply is clicking and it may or may not come up.
451	"Fuses keep blowing" – The fuses continue to blow after replacement.
452	"Causes system failure" – The logic board is OK, but the system crashes during normal operation or on power-up.
453	"Noisy; works OK" – The customer complained about the noise of the power supply; there is no other problem.
454	"No power" – The power supply does not come on.
455	"System randomly resets" – The logic board is OK, but the system randomly resets during normal operation.

Keyboards, Mice, Input Devices

The following symptom codes are for all input devices, as applicable. These symptom codes are between 550 and 554.

Number	Explanation
550	"No or bad response" – The logic board is OK, but no output is displayed when keys or buttons are pushed.
551	"Bad keyswitch or button" – No output is visible when a specific keyswitch or button is pressed.
552	"Foreign substance spilled on unit" – Something has been spilled on the device (soda pop, etc.).
553	"Sticky or bouncing keys" – The logic board is OK, but hitting any keyswitch once, or hitting a specific keyswitch once, results in two or more characters being displayed on the monitor.
554	"No cursor response" – The cursor does not move.

All Printers

The following symptom codes are for all printer modules, as applicable, except power supplies. These symptom codes are between 650 and 660.

Number	Explanation
650	"Improper print head movement" – The print head does not move, or it moves erratically.
651	"Paper won't feed" – The paper does not feed correctly.
652	"Self-test OK; won't print from host" – The printer runs the self-test and passes, but will not print when a print command is sent from the computer.
653	"Fails self-test" – The printer will not run the self-test, or the output of the self-test has poor print quality.
654	"Won't select from front panel" – Pressing the select button on the printer does not select the printer.
655	"Printer not seen in Chooser" – The printer is not accessible through the Chooser.
656	"Prints blank pages" – The printer responds to the print command, has proper head movement and paper feed, but does not print; all pages are blank.
657	"Prints black pages" – The pages print out solid black.
658	"Print is distorted or uneven" – The print quality is poor, or the intensity of the print is uneven.
659	"Indicator light suggests fault" – A panel light indicates a problem.
660	"No power light" – The power light is not lit.

❑ MODIFIER CODES

Modifier Codes

Choose the modifier code that best depicts the conditions of the failure symptom. When more than one applies, choose the highest-numbered modifier.

Number	Explanation
1	"Continuous" – The symptom can be repeated every time.
2	"Intermittent" – The symptom happens randomly, with no apparent pattern.
3	"Environmental; can't duplicate symptom" – The symptom happens only in a particular location or under certain environmental conditions (outside, in hot or humid weather, etc.); or you cannot duplicate the customer's problem.
4	"Always fails after a while" – The symptom happens only after the power has been on for a certain amount of time.
5	"Depends on configuration" – The symptom happens only when using a peripheral device or under some specific system configuration of hardware or software. The peripheral problem could be related to software or switch settings. Also includes problems during specific actions (during insert/eject action of a drive, etc.).
6	"Fails only with application software" – The symptom happens only with application software. The problem could occur with one or more applications. The module does not fail service diagnostics.
7	"Noisy" – The module may or may not function OK but is noisy.
8	"Inoperable upon first use" – The module fails the first time it is used.

❑ EXAMPLES

The following table presents a few examples of problems you may encounter when servicing Apple products. The table lists the correct symptom and modifier codes that make up the four-digit code for the SRO form.

Problem	Symptom Code	Modifier Code	Comments
Mac II logic board always fails self-test at startup.	152 – "Sad Mac; self-test fails; startup error"	1 – "Continuous"	Enter 1521 on the SRO form.
Mac II logic board bombs only when running MacWrite.	153 – "System bombs or crashes"	6 – "Fails only with application software	Enter 1536 on the SRO form.
Mac II logic board always bombs when running MacWrite but only after an hour.	153 – "System bombs or crashes"	6 – "Fails only with application software" and 4 – "Always fails after a while"	Since 6 is higher than 4, enter 1536 on the SRO form.
Mac II logic board does not print.	173 – "Printing or AppleTalk problem"	1 – "Continuous"	Enter 1731 on the SRO form.

Apple Technical Procedures

You Oughta Know...

Section 6 – Electrostatic Discharge (ESD)

❑ CONTENTS

6.2 Introduction
6.3 ESD Prevention Rules
6.4 Setting Up an ESD-Safe Workstation

❑ INTRODUCTION

Static (or "stationary") electricity is, simply, electricity that is not moving. And it is harmless as long as it remains static. Unfortunately, an electrical charge is unstable and is always looking for an opposite charge to unite with. When a charge moves, it becomes a *current*—often a greater current than a microcircuit can handle.

You may already know that touching a chip lightly with your fingertip can degrade a circuit so that it never again performs to specifications. But did you know that brushing certain kinds of clothes (like your polyester shirt) over a printed circuit board can do the same thing? In fact, unprotected electronic devices can be "zapped" just by waving a charged object nearby.

The smallest charge you can feel is 3,000 volts; the smallest charge you can see is 5,000 volts; and the smallest charge you can hear is 10,000 volts. **But some of the newest semiconductor devices are susceptible to as little as 10 volts, or one three-hundredths as much as you can feel.**

Electrostatic discharge (ESD) has therefore become more and more of a hazard as microcircuits have become smaller and more sensitive.

This section contains rules for preventing ESD damage to equipment you are working on. It also contains instructions on setting up an ESD-safe workstation. **These rules and instructions hold true whether you are working at your shop or at a customer's site.**

❑ ESD PREVENTION RULES

Here are the rules you need to learn and follow to prevent ESD damage. We have included a key word above each rule as a memory aid:

Grounds

Before working on any device containing a printed circuit, ground yourself and your equipment to an earth or building ground.

Use a grounded conductive workbench mat and a grounding wriststrap, and ground your equipment to the mat.

WARNING: *Make sure you are* ***not*** *grounded when :*

- *You work on plugged-in equipment*
- *You discharge a Cathode Ray Tube (CRT)*
- *You work on an unplugged CRT that has not yet been discharged*

Bodies

Don't touch anybody who is working on integrated circuits.

If that person is properly grounded, your "zap" may not cause any damage, but just to be on the safe side, do not touch or brush against other technicians.

Bags

Use static-shielding bags for boards and chips during storage, transportation, and handling.

When you are ready to leave your bench and take a board to a storage place, first put the board in a static-shielding bag. Leave all Apple service exchange components in their ESD-safe packaging until you need them.

Leads

Handle all ICs by the body, not the leads.

Also, do not touch edge connectors on boards or cards, exposed circuitry, or printed circuits. Handle ICs, boards, and cards by the edges, or use extractors.

Synthetics

Do not wear polyester clothing or bring plastic, vinyl, or styrofoam into the work environment.

The electrostatic field around these nonconductors cannot be removed.

Metals

Never place components on any metal surface.

Use antistatic, conductive, or foam rubber mats.

Atmosphere

If possible, keep the humidity in the service area between 70% and 90%, and use an ion generator.

Charge levels are reduced (but not eliminated) in high-humidity environments and in areas where an ion generator is used routinely.

❑ SETTING UP AN ESD-SAFE WORKSTATION

Materials Required

Conductive workbench mat, with ground cord
Wriststrap, with 1 megohm resistor and ground cord
Equipment ground cord, with alligator clips
Ground/polarity tester

Setup and Procedure

After you gather the materials above, **remove all ESD hazards from the area**:

- Styrofoam
- Common plastics
- Synthetic clothing
- Vinyl

These nonconductive materials cannot be grounded and will retain a charge for hours and even days. Since the static field surrounding them can easily damage sensitive components, it's best to keep these materials completely out of your work area.

After you remove the ESD hazards, proceed as follows:

1. **Use a ground/polarity tester to verify proper grounding of the power outlet.**

   Ground/polarity testers vary slightly in design, but all are very simple to use. Insert the three prongs

of the tester into the three-prong outlet. If the outlet is wired incorrectly, most testers show a light pattern that matches a code given on the tester.

If the tester does not verify proper grounding, move to another outlet that is safe—whether you are at the customer's site or at your shop.

2. **Connect the ground cord of the workbench mat to ground.**

3. **Use a wriststrap ground cord. Fasten it to the workbench mat and to the wriststrap.** The wriststrap should touch your skin.

   All objects in the service area should be grounded to the same potential. Touching the chassis of a machine will bring you to the same potential as the machine, which is better than nothing. However, since just the act of shifting your weight from one foot to the other can generate static, momentary "touch" grounding is not enough. That is why you need the continuous grounding provided by a grounded wriststrap.

4. **Finally, ground the equipment you are working on.**

   Use alligator clips and a grounding cord to attach any metal part of the device you are working on to the grounded workbench mat.

   If you are working on a product that has a three-prong power cord, you can attach the ground pin of the power cord to the workbench mat using your alligator clips and ground cord. (Of course, the unit will not be plugged into the wall outlet.)

WARNING: *When you discharge a CRT or work with a powered-on CRT, do not wear a wriststrap, and do not work on a grounded pad.*

Apple Technical Procedures

You Oughta Know...

Section 7 – Mouse Preventive Maintenance

❑ CONTENTS

7.2 Introduction
7.3 Preventive Maintenance
7.3 Take-Apart
7.4 Cleaning
7.4 Reinstallation

❑ INTRODUCTION

Most problems with mouse operation can be easily avoided by using common sense and treating the mouse as carefully as you can, and by keeping the mouse and its operating surface clean. Encourage owners of mouse input devices to perform the following cleaning procedure (see "Preventive Maintenance") once a month. The procedure can also be found in the owner's manual.

To keep the mouse operating efficiently, keep these simple rules in mind:

- Do not drop the mouse or let it hang from a table by its cable.
- Keep the surface on which you move the mouse smooth, clean, and dust-free.
- Clean the mouse once a month.

❑ PREVENTIVE MAINTENANCE

Materials Required

Clean, dry cloth
Cotton swab
Isopropyl alcohol, or tape head cleaner

Take-Apart

To clean the mouse, perform the following steps:

1. Remove the mouse cable from the desktop bus port.

2. Turn the mouse upside down, and rotate the circular plastic dial (Figure 1, #1) counterclockwise as far as it will go. The dial indicator (Figure 1, #2) should then point to the "O" on the mouse surface.

3. Cup the dial and tracking ball in your hand, and turn the mouse right side up. The dial and ball will drop into your hand.

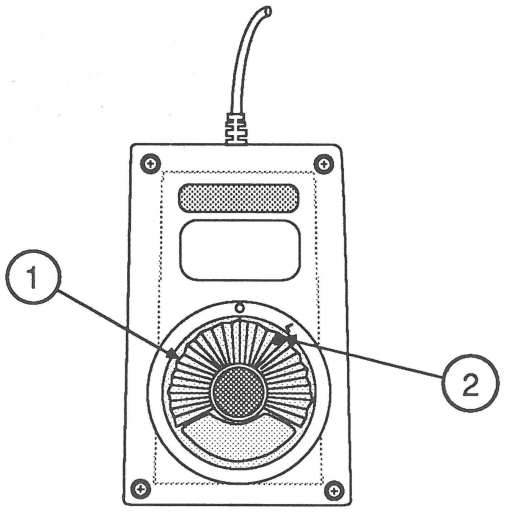

FIGURE 1

Cleaning

1. Locate the rollers inside the bottom case of the mouse. The rollers are similar to those found on tape recorders, and will vary in number and material depending upon the mouse version.

2. Gently blow out any dust that has collected inside the bottom case.

3. Using a cotton swab moistened with alcohol or tape head cleaner, gently wipe off any oil or dust that has collected on the rollers. Rotate the rollers to clean all surfaces.

CAUTION: *When cleaning the tracking ball, do not use tissue or anything that can leave lint, and do not use cleaning liquid.*

---

4. Clean the tracking ball by wiping it with a soft, dry cloth.

Reinstallation

1. Replace the tracking ball inside the case.

2. Align the dial indicator with the "O" on the mouse case. Reinstall the dial on the mouse, and turn the dial clockwise until the indicator lines up with the "L" on the mouse surface.

3. Insert the mouse cable in the desktop bus port.

Apple Technical Procedures

You Oughta Know...

Section 8 – CRT Safety

❑ CONTENTS

8.2 Introduction
8.3 Safety Precautions
8.3 Safe Electrical Setup
8.4 CRT Safety Rules
8.6 Live Adjustment Rules
8.7 Discharging the Cathode-Ray Tube
8.8 Types of Discharge Tools
8.9 Discharge Procedure
8.12 Anode Cap
8.13 Disposing of the Cathode-Ray Tube
8.13 Devacuuming the CRT

❑ INTRODUCTION

A cathode-ray tube (CRT) provides the video display for the Macintosh 128K, 512K, SE, and SE/30 computers and for all Apple II and Macintosh II monitors. The CRT is a picture tube that operates at very high voltages and contains a high vacuum. If cracked or broken, the CRT can implode (collapse into itself) and scatter fragments of glass. When working on or near a CRT, you should follow all safety rules and take every precaution against breaking the tube, especially at the neck where the tube is thinnest.

❑ SAFETY PRECAUTIONS

A video monitor is harmless as long as you're just watching the display. Once you remove the cover, however, you are exposed to the high voltage cathode-ray tube (CRT)—the picture tube. The following precautions must be taken to ensure your safety, especially when you are making adjustments on a live CRT.

Safe Electrical Setup

- **Be sure your outlet is correctly wired and properly grounded.**

  Polarity and ground testers are available from most electronics stores. Test all outlets in your service shop before working on **any** electrical equipment. If you have any doubts about your building's wiring, consult a qualified electrician.

- **Never use an adaptor plug to connect a monitor's three-prong power plug to a two-prong wall outlet.**

  Adaptors defeat the ground pin, which is a safety feature.

- **When performing live adjustments, use an isolation transformer between the monitor and the outlet.**

  Order an isolation transformer from your electronics distributor, and make it a practice to use it whenever you are working with **any** charged monitor or other powered system under test. An isolation transformer isolates the circuitry of the system under test from the power company's circuitry, thus reducing the likelihood of a severe shock should you simultaneously contact high voltage and anything else that is earth grounded.

  Do not connect more equipment to the transformer than the wattage capacity of the transformer will bear. (It is usually best to connect only one piece of equipment at a time.) We recommend an isolation transformer with a minimum wattage capacity of 500 VA, with grounded three-prong cord and receptacle. Two such transformers, available from many electronics stores and distributors, are listed below:

  Triad N-57MG Stancor GIS 500

CRT Safety Rules

- **Do not work on a CRT alone.**

  If there is an accident, it could save your life to have someone else nearby. Apple recommends that your staff be trained in cardio-pulmonary resuscitation (CPR).

- **Remove rings, wristwatches, hanging necklaces, and other jewelry before performing repairs on a CRT.**

  Metal jewelry is an excellent conductor of electricity. Removing jewelry will reduce the possibility of electric shock.

- **Never use a grounding wriststrap or heelstrap or work on a grounded workbench mat when discharging a CRT or when performing live adjustments.**

  Grounding wriststraps, heelstraps, and mats protect sensitive components from the damaging effects of electrostatic discharge from your body or clothing. Even though the straps and mats contain one-megohm resistors and conduct only small electrical charges, Apple recommends that straps and mats be used **only** when working on "dead" (uncharged) equipment.

- **Wear safety goggles when working with a CRT.**

  The CRT contains a high vacuum. If cracked or broken, it can implode (collapse into itself) and scatter fragments of glass. To protect your eyes from serious injury, always wear safety goggles when working on or near a CRT, and be careful of other people in the area.

- **Before working inside a monitor or a Macintosh containing a CRT, turn off the power and disconnect the AC power cord.**

  Certain parts of a monitor or Macintosh chassis are **hot** (electrified) when the unit is under power. Except when you **must** have the power on (for example, when making live adjustments), never work on a plugged-in monitor or Macintosh video.

- **Keep one hand in your pocket or behind your back when working on a live monitor or Macintosh video.**

  Working with only one hand reduces the risk of current passing through your heart, should you accidentally contact high voltage.

- **Always discharge the anode before touching anything inside the monitor or Macintosh video.**

  Some monitors and some Macintoshes containing CRTs have a bleeder resistor on the anode that drains the charge when the power is turned off. **Nevertheless, in case the resistor fails and leaves the anode fully charged, you must perform the discharge procedure before working inside the unit.**

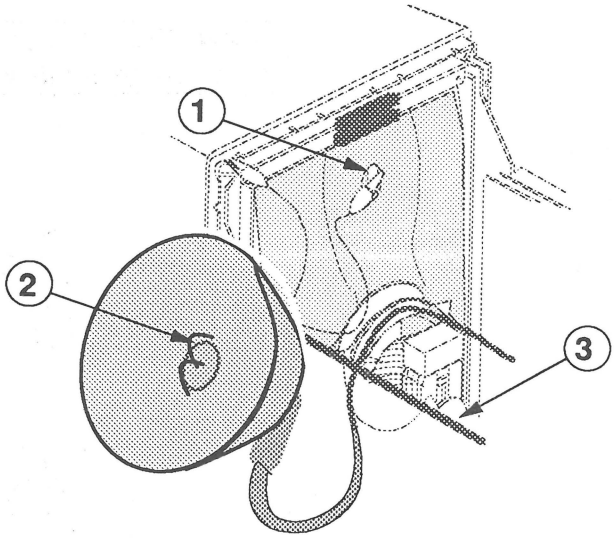

FIGURE 1

- **Never touch the anode connector or the anode aperture.**

  Normally the anode aperture (Figure 1, #1) has a connector plugged into it (Figure 1, #2). When a CRT is replaced, the anode connector is removed, exposing the anode. If the bleeder resisitor fails, the anode can retain a charge of several thousand volts (even when power is off), and can regain some charge even after it has been discharged.

- **Do not pick up or handle a CRT by its neck.**

  To prevent an implosion, you should take every precaution against breaking the tube. Be especially careful with the neck (Figure 1, #3), the area where the tube is the thinnest.

Live Adjustment Rules

When performing live adjustments, use a plastic adjustment tool or insulated screwdriver only. When adjusting a live monitor or Macintosh video, never touch the following components (shown below on a Macintosh SE and on a typical monitor—location of these components will vary by product):

- The yoke wires (Figure 2, #1)
- The anode connector (Figure 2, #2)
- The anode wire (Figure 2, #3)
- The flyback transformer (Figure 2, #4)

WARNING: *Serious injury could result if you touch any of these components with the power on.*

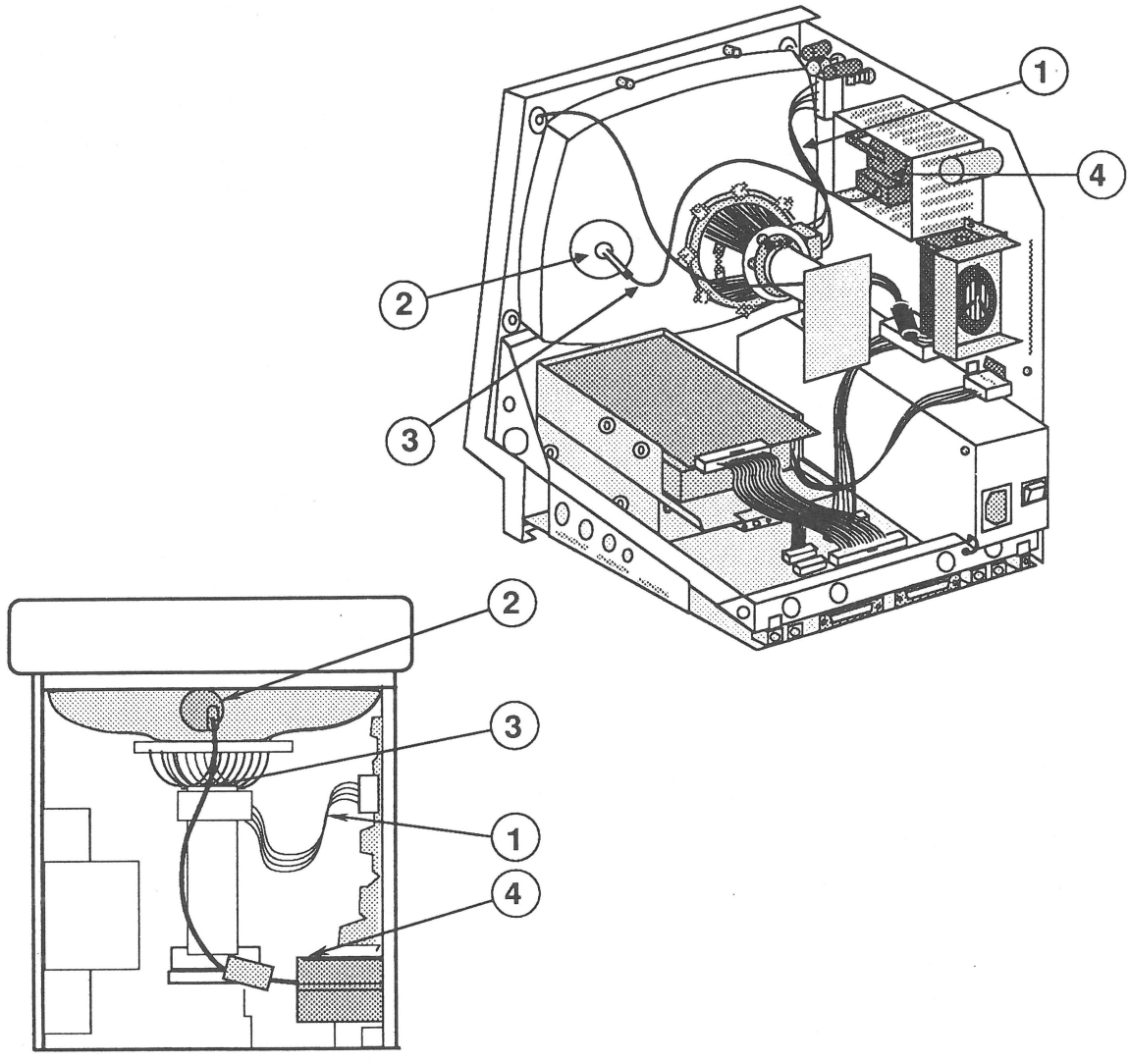

FIGURE 2

❑ DISCHARGING THE CATHODE-RAY TUBE (CRT)

In the following steps, you will discharge the high voltage from a picture tube (the cathode-ray tube—CRT). Discharging the tube before working on it lessens the chance of an electric shock.

Many later Macintosh video monitors are equipped with a bleeder resistor that automatically drains the charge from the CRT when the power is shut off. **However, the resistor may have failed and the anode may still be fully charged. Thus you must follow the discharge procedure below to ensure your safety in the event that the resistor has failed.**

Materials Required

Safety goggles
Foam pad (ungrounded)
Needlenose pliers
Alligator lead with clips at both ends
Newer Apple CRT discharge tool (**recommended**)
(without resistor; part number **076-0381**)
or
Older Apple CRT discharge tool
(with resistor; part number **076-0243**)
and/or
Large, flat-blade screwdriver with insulated handle

Types of Discharge Tools

Three types of tools may be used to discharge a CRT (see Figure 3):

- **The older version of the Apple CRT discharge tool** (part number **076-0243**). (See Figure 3.) This tool is shaped like a fat fencing foil, with a copper alligator clip and no hand guard. This older discharge tool contains a **100-megohm resistor**, which means you will **not** hear an electrostatic crack when the CRT discharges, even if the monitor has no bleeder resistor. This older tool was designed with a resistor in order to diminish the impact of the electrostatic discharge on the Macintosh or Macintosh Plus logic board if a technician accidentally discharges the CRT to the metal chassis instead of to the ground lug. (The Macintosh logic board circuitry is grounded to the chassis.) This older tool is thus safer for use on the the Macintosh CRT. **However, since this tool does not provide auditory feedback (the electrostatic "crack"), the technican must repeat the discharge procedure using an insulated screwdriver to ensure that the CRT is indeed discharged.**

- **The recommended newer version of the Apple CRT discharge tool** (part number **076-0381**—the part number is marked on the tool). (See Figure 3.) This new version is also shaped like a fat fencing foil, but features a stainless steel aligator clip and has a hand guard. This discharge tool has no internal resistor—thus you may hear the electrostatic crack when discharging any monitor without a bleeder resistor. **Apple recommends this new tool because it is safer for the technician.** First of all, it has thicker insulation and a hand guard. Second, it permits auditory feedback (the electrostatic "crack"), which assures the technician that the CRT is indeed discharged. **But remember, if you use this new tool on a Macintosh or Macintosh Plus, you must discharge to the ground lug to avoid destroying the logic board!**

- **An insulated screwdriver** attached to a wire lead with alligator clips on both ends. Use this discharge method as a follow-up after using the older Apple CRT discharge tool (to ensure that the CRT is discharged). You can also use the screwdriver method if you do not have a discharge tool. Follow carefully all instructions given in the next section.

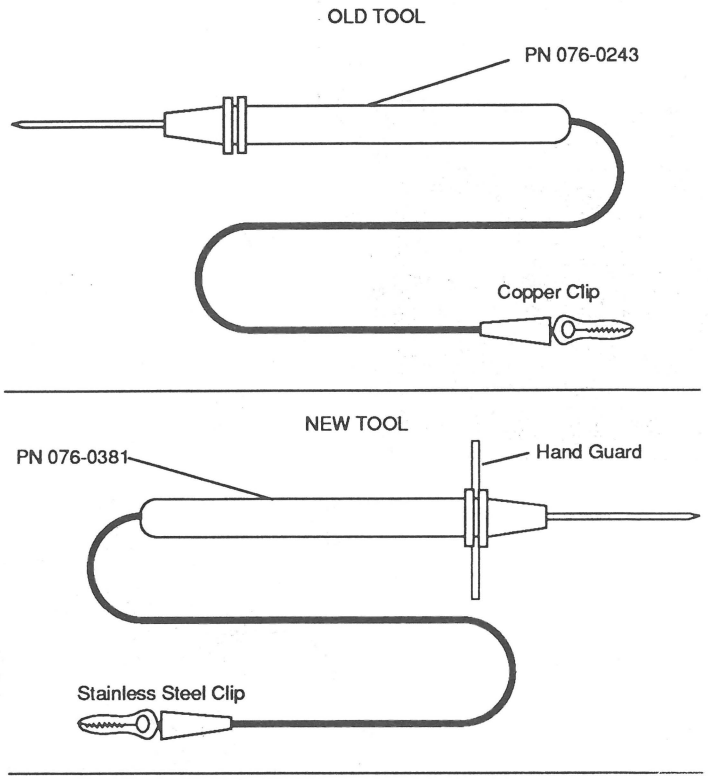

FIGURE 3

Discharge Procedure

1. **Read "Safety Precautions" in this section before you proceed!**

WARNING: *To prevent serious injury, do not touch the yoke assembly, yoke wires, anode wire, anode connector, flyback transformer, the inside of the AC power switch, or the primary fuse. If you have questions as to where these parts are located in the monitor or video-enclosed Macintosh CPU you are working on, refer to the Technical Procedures for that product.*

2. Remove any metal jewelry and your grounding wriststrap. Put on the safety goggles.

3. Remove the cover and any internal shielding by referring to the Technical Procedures for your monitor or video-enclosed Macintosh CPU.

4. Set the monitor or Macintosh upright on the ungrounded foam pad, with the back facing you.

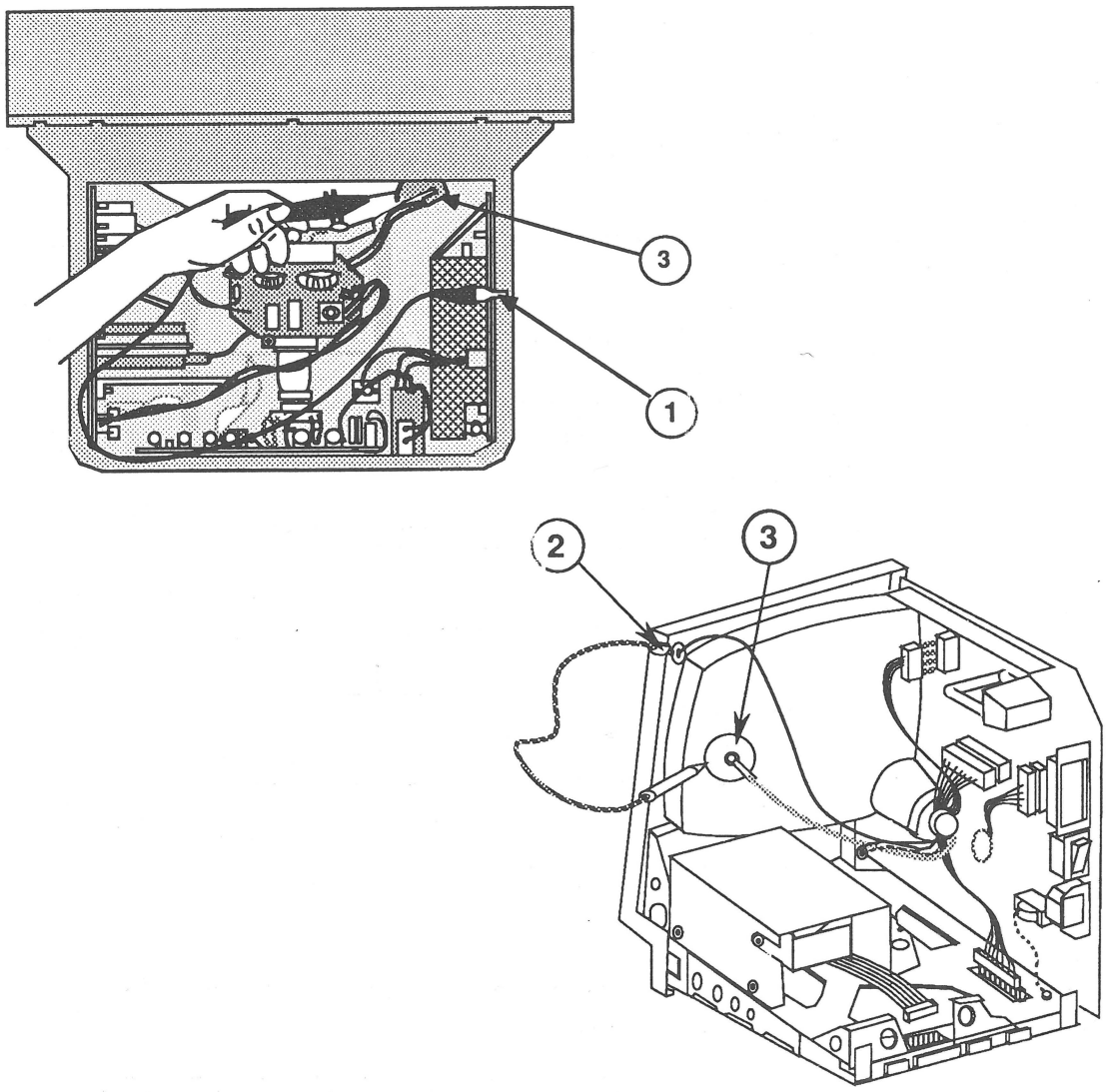

FIGURE 4

5. Attach the clip of the CRT discharge tool to any metal part of the monitor chassis (Figure 4, #1) **or to the ground lug of the Macintosh** (Figure 4, #2). If you are using the screwdriver method, attach one end of the alligator lead to the metal screwdriver blade (Figure 5, #1). Attach the other end of the alligator lead to the monitor chassis (Figure 5, #2) **or to the ground lug of the Macintosh**. (Figure 4, #2).

CAUTION: *If you discharge the Macintosh CRT to the metal chassis, you may destroy the logic board. You must discharge to the ground lug!*

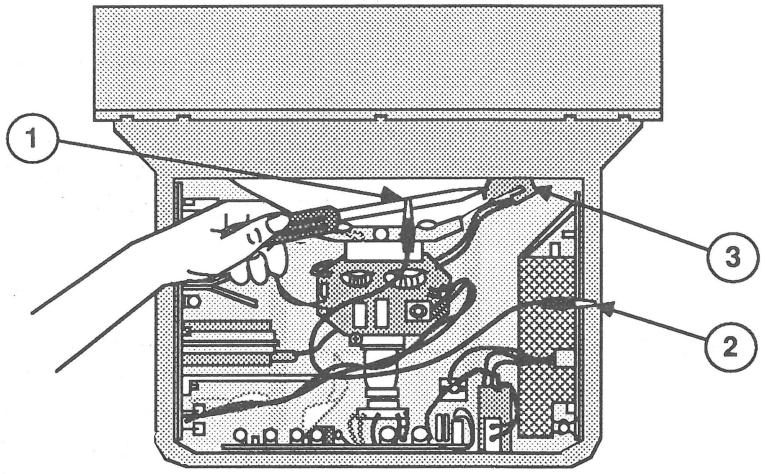

FIGURE 5

6. Put one hand behind your back, and grasp the handle of the discharge tool or insulated screwdriver with your other hand.

7. Hold the CRT discharge tool or the insulated screwdriver to the tube surface, and insert the tool probe or screwdriver blade under the anode cap (Figure 4, #3 or Figure 5, #3) until the probe or blade touches the anode ring.

   Note: Since the older version of the CRT discharge tool (Apple part number **076-0243**) has a 100-megohm resistor, you will never hear an electrostatic crack when using this tool for CRT discharge, even on monitors and Macintosh videos without bleeder resistors. The newer version of the CRT discharge tool (Apple part number **076-0381**) contains no resistor, so you may hear an electrostatic crack when a monitor without a bleeder resistor discharges.

8. Remove the probe of the CRT discharge tool or the blade of the insulated screwdriver from under the anode cap. Detach the discharge tool's alligator clip from the metal chassis or Macintosh ground lug.

CAUTION: *If you performed steps 1-8 using the older version of the discharge tool (and thus did not hear the electrostatic crack that confirms that the monitor discharged), ensure that the CRT is discharged by repeating steps 5 through 8 using the large, insulated flat-blade screwdriver and alligator lead.*

Note: If the bleeder resistor in the monitor or Macintosh video fails, a secondary charge could build up over a period of time, even after you have discharged the CRT. To dissipate any residual charge, establish an ongoing ground by clipping one end of an alligator lead to the monitor chassis (**or to the Macintosh ground lug**) and the other end to the anode aperture.

Anode Cap

For some procedures, you may have to remove the anode cap. To do so, peel back the anode cap until you can see the anode ring (or connector) at the center. Using needlenose pliers, compress the two prongs on the connector to free it from the anode aperture.

To replace the anode cap, press together the two prongs of the anode connector so that you can insert it into the aperture. Tug on the anode wire to make sure it is firmly seated, then press down around the edges of the rubber anode cap to ensure a firm seal.

❑ DISPOSING OF THE CATHODE-RAY TUBE (CRT)

WARNING: *To properly dispose of a defective CRT, you must first devacuum the CRT before throwing it in a trash receptacle. Discarded CRTs that have not been devacuumed may become cracked and implode, injuring anyone who happens to be near. To prevent serious injury, follow the procedure described in this section whenever discarding a CRT.*

Materials Required

Thick cardboard box large enough to conceal the CRT
Large, sharp diagonal cutters
Large pliers
Duct tape
Safety goggles
Gardening gloves
12" x 12" Piece of cloth or heavy paper

Devacuuming the CRT

1. Put on safety goggles.

2. In the side of the box about six inches from the bottom, cut or drill a hole just large enough to insert the very tip of the CRT neck.

3. Place the CRT inside the box with the tip of the neck protruding through the hole, and tape the box flaps down with the duct tape (Figure 6).

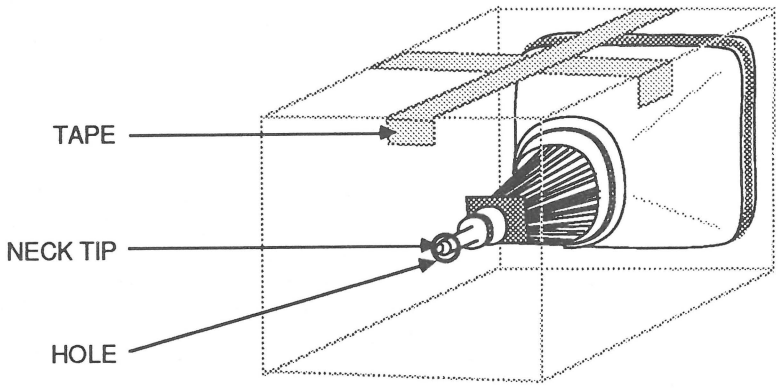

FIGURE 6

WARNING: *Only the very tip of the CRT neck should be protruding through the hole in the box. The box must not have any other opening.*

4. Put on the gloves.

5. Using the diagonal cutters, carefully clip off the connector pins on the end of the CRT neck.

6. Tape the piece of cloth or paper onto the box (see Figure 7) so that it forms a veil over the opening, but allows your hand access to the tip of the CRT. The veil's purpose is to catch bits of glass that may fly during the following step.

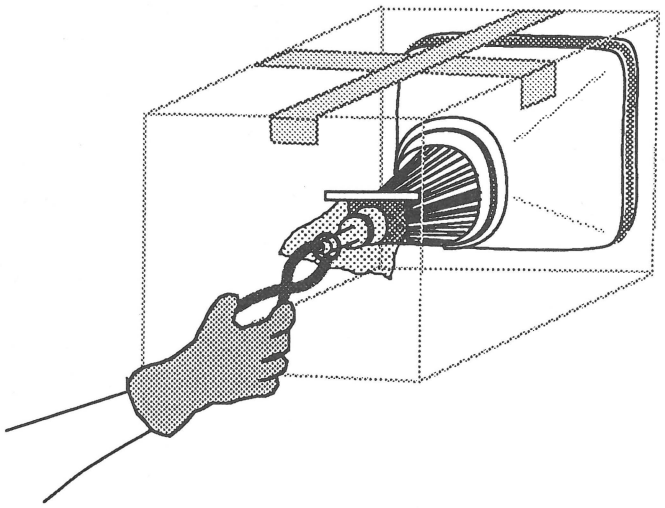

FIGURE 7

7. Make sure no one is standing nearby. Place the pliers under the veil and stand to one side and look away while you use the pliers to snip off the exposed tip of the CRT (see Figure 7).

WARNING: *Do not look directly at the box when cutting off the tip!*

Note: You will probably hear a rush of air entering the CRT when the CRT vacuum breaks—but even if you don't, the procedure is complete if the tip of the CRT is clearly broken off.

Apple Technical Procedures

You Oughta Know...

Section 9 – SIMM Removal Tool

❑ CONTENTS

9.2 SIMM Removal Tool
9.2 Tool Adjustment
9.3 Board Removal (vertical)
9.4 Board Removal (angle)

❑ SIMM REMOVAL TOOL

The Single In-line Memory Module (SIMM) removal tool can be used to remove SIMM memory boards from the SIMM sockets on any of the Macintosh or LaserWriter main logic boards. The removal tool reduces the possibility of breaking the holding tabs on the SIMM sockets. The tool is basically used two ways, depending on whether the SIMMs are mounted vertically or at an angle.

Tool Adjustment

To properly use this tool, it must be adjusted correctly.

1. On the bottom of the tool, there is an adjustment screw. Loosen this screw slightly so that the two parts of the tool can move with some resistance.

2. Adjust the tool from side to side (Figure 1) until the grooves (Figure 1, #1) fit over the edges of the SIMM board you are going to remove, and tighten the screw.

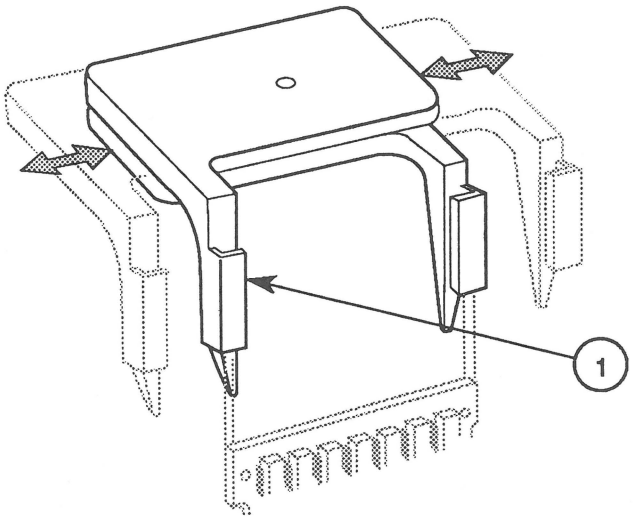

FIGURE 1

Board Removal (vertical)

1. Place the grooved ends of the tool over the edges of the SIMM (Figure 2, #1). Make sure the tool faces the same way as in the figure (chips facing out).

2. Gently press the tool down onto the board. The edges of the tool should push the plastic holders slightly to the side (Figure 2, #2).

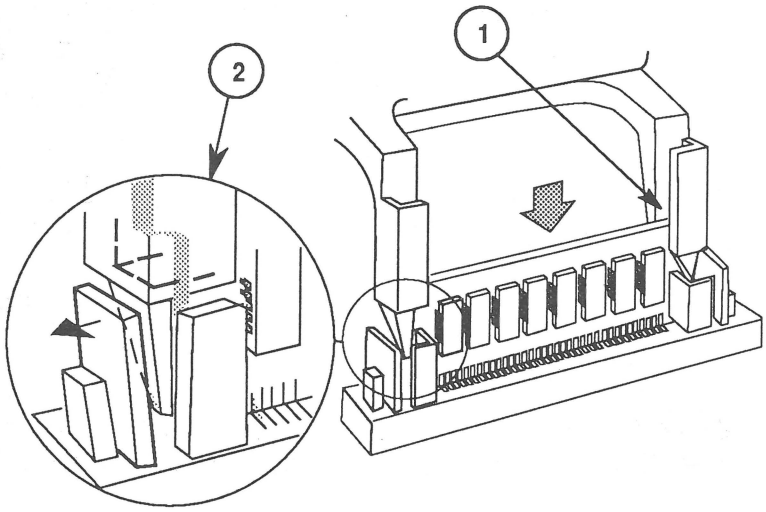

FIGURE 2

3. Once the tool is on the SIMM board, gently rotate the tool backward (Figure 3) until the board becomes loose.

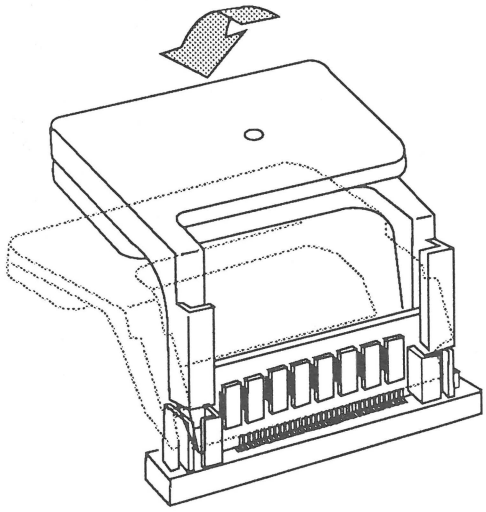

FIGURE 3

4. Pull up and remove the SIMM from the socket (Figure 4).

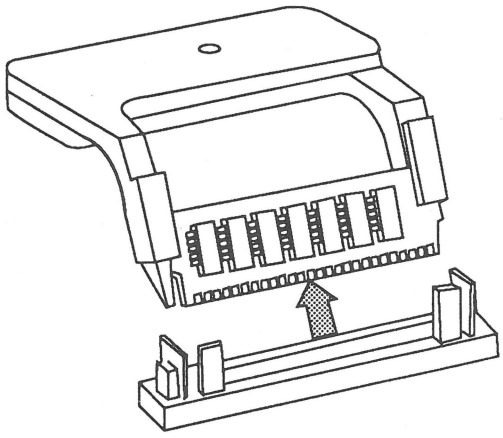

FIGURE 4

Board Removal (angle)

1. Adjust the tool to the size of the SIMM board you are going to remove (Figure 5).

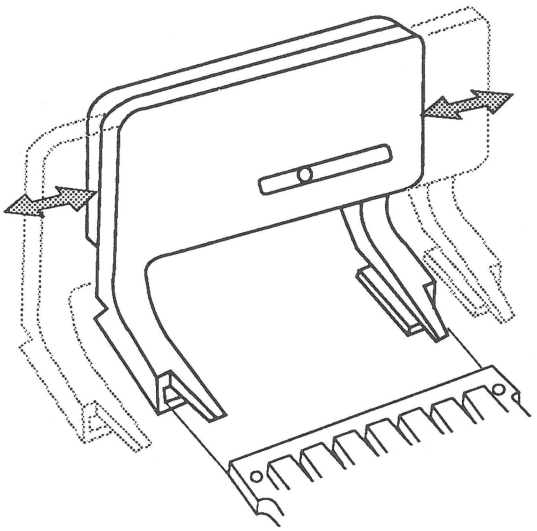

FIGURE 5

2. Place the grooved ends of the tool over the edges of the SIMM board (Figure 6, #1).

3. Gently slide the tool on the board so that the leading edge of the tool (Figure 6, #2) slides over the protruding alignment button (Figure 6, #3) and spreads the SIMM socket tabs (Figure 6, #4).

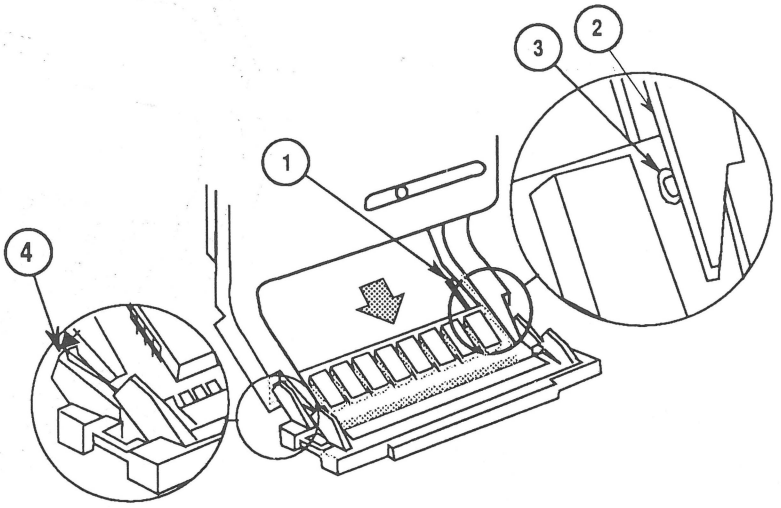

FIGURE 6

4. As you are sliding the tool on and the tabs are spreading, gently rotate the tool forward (Figure 7) until the SIMM comes loose.

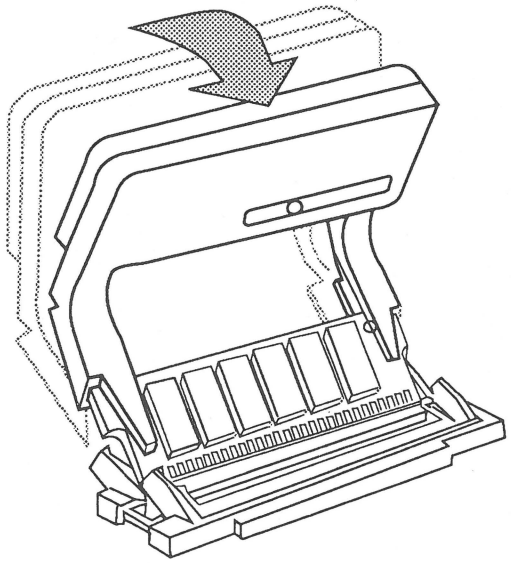

FIGURE 7

5. Remove the tool and the SIMM from the socket (Figure 8).

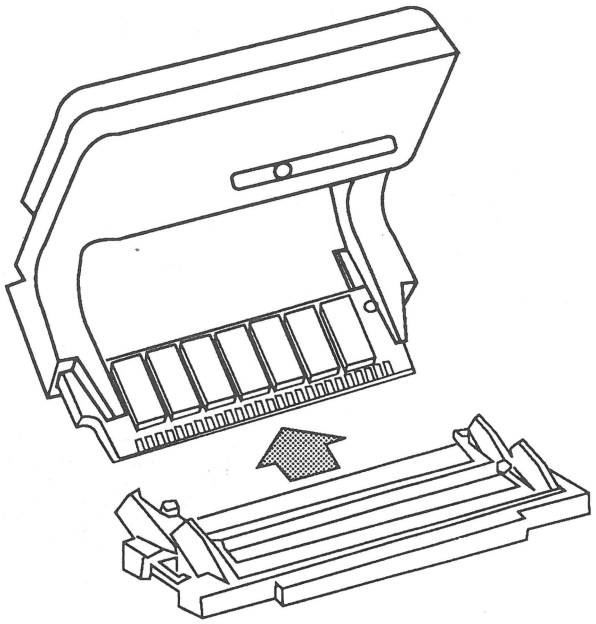

FIGURE 8

Apple Technical Procedures

Disk Drives

Technical Procedures

TABLE OF CONTENTS

Section 1– Drive Compatibility

1.2 Compatibility of 3.5-Inch (800K) Drive Mechanisms

©Apple Computer, Inc., 1982, 1984, 1985, 1986, 1987, 1988, 1989. No portion of this document may be reproduced in any form without the written permission of Apple Computer, Inc.

Macintosh, Apple, and the Apple logo are registered trademarks of Apple Computer, Inc.

Apple Technical Procedures

Disk Drives

Section 1 – Drive Compatibility

❑ CONTENTS

1.2 Compatibility of 3.5-Inch (800K) Drive Mechanisms

❑ COMPATIBILITY OF 3.5-INCH (800K) DRIVE MECHANISMS

As of November 1985, Apple has substituted the Apple 3.5 Drive mechanism (P/N 661-0345) for the older 800K drive mechanism (P/N 661-0305) that was originally manufactured for the Macintosh 512K enhanced and Macintosh Plus internal and external drives and the UniDisk 3.5.

The two drive mechanisms are interchangeable in most cases. The compatibility chart below shows which mechanism(s) can be used in each of Apple's 3.5-inch 800K drives.

DRIVE AND CABLE COMPATIBILITY --800K MECHANISMS--

DRIVES (below)	APPLE 3.5 MECHANISM 661-0345 MFD-51W-03 (Red on Silver Label)	800K DRIVE MECHANISM 661-0305 MFD-51W or 51 W-10 (Black on Silver Label)
Internal Drive Macintosh Plus or 512K Enhanced	X with yellow internal drive cable 590-0437	X with red internal drive cable 590-0167
External 800K Drive	X	X
UniDisk 3.5 Drive	X	X
Apple 3.5 Drive	X	NO
Internal Drive Macintosh SE or Macintosh II	X Either Cable	X Either Cable

X = compatible

NO = noncompatible

Note: As shown above, when you are installing the Apple 3.5 Drive mechanism in the internal drive of the Macintosh 512K enhanced and Macintosh Plus, the yellow internal drive cable must be used. When you are installing the older 800K mechanism in the Macintosh 512K enhanced and Macintosh Plus, you must use the red internal drive cable. In the Macintosh SE or Macintosh II, either cable may be used with either mechanism.

Apple Technical Procedures

Apple 3.5 Drive

Technical Procedures

❑ TABLE OF CONTENTS

Section 1 – Basics	1.2	Product Description
	1.2	Compatibility
	1.3	Initialization
	1.3	Inserting and Ejecting Diskettes
	1.4	Drive Mechanism Packaging
Section 2 – Take-Apart	2.3	Case
	2.5	External Drive Cable and Shield
	2.7	Daisy Chain Interface Board
	2.9	800K Drive Mechanism
	2.12	Eject Switch Assembly
	2.13	LED Assembly
Section 3 – Diagnostics	3.2	Introduction
	3.2	Using System Utilities (Apple IIGS)
	3.3	Formatting
	3.5	Copying
	3.6	Booting from the Apple 3.5 Drive
Section 4 – Troubleshooting	4.2	Using the Apple 3.5 Symptom Chart
	4.3	Apple 3.5 Drive Symptom Chart
Section 5 – Additional Procedures	5.2	Apple 3.5 Drive Spinning Problem
	5.3	Replacing the Revision A Board
Illustrated Parts List	IPL.3	Finished-Goods Assembly (Figure 1)
	IPL.5	Service Packaging, 800K/1.4 MB Drives (Figure 2)

©Apple Computer, Inc., 1986, 1987, 1988. No portion of this document may be reproduced in any form without the written permission of Apple Computer, Inc.

Macintosh, Apple, Apple IIGS, and the Apple logo are registered trademarks of Apple Computer, Inc.

Apple Technical Procedures

Apple 3.5 Drive

Section 1 – Basics

❑ CONTENTS

1.2 Product Description
1.2 Compatibility
1.3 Initialization
1.3 Inserting and Ejecting Diskettes
1.4 Drive Mechanism Packaging

❑ PRODUCT DESCRIPTION

Compatibility

The Apple® 3.5 Drive is a self-contained external data storage system that can record up to 800K of data on 3.5-inch double-sided disks. It works with the following systems:

- Apple IIGS™
- Apple IIc Plus
- All Macintosh™ CPUs **except** the Macintosh II and Macintosh IIx

Other 3.5-inch and 5.25-inch floppy disk drives may be daisy-chained off the connector at the rear of the Apple 3.5 Drive. The Macintosh family of computers does not support the daisy-chaining of floppy disk drives. (You can, however, connect a floppy disk drive to a hard disk.)

The Apple 3.5 Drive is similar to the other Macintosh 800K drives but has the following added features:

- DB-19 daisy-chain port and interface board
- Eject button
- LED
- Platinum case color

In general, you may use the Apple 3.5 Drive mechanical assembly in the 800K drives listed below, with the stated reservation:

- Macintosh External 800K Drive
- Macintosh Internal 800K drive—**use with the YELLOW logic-board-to-drive cable only.** (The **red** logic-board-to-drive cable is used only when installing a Macintosh External or Internal 800K mechanical assembly into the internal drive of the Macintosh.)

  Note: The other 800K mechanical assemblies may not be used in the Apple 3.5 Drive (that is, there is downward compatibility but no upward compatibility).

The Apple 3.5 Drive 800K mechanism may be distinguished from other Apple 800K drives by the color of the label on the side of the drive mechanism itself:

- Apple 3.5 Drive — RED on silver
- All other Apple 800K drives — BLACK on silver

The Apple 3.5 Drive may also be distinguished from the Macintosh 800K internal and external drives by serial number series:

- Internal Macintosh 800K Drive — Series 51W
- External Macintosh 800K Drive — Series 51W-10
- Apple 3.5 Drive — Series 51W-03

Initialization

You may use 400K single-sided diskettes in the 800K drive. When you insert a blank unformatted diskette into the drive, the Macintosh will ask if you wish to initialize it as single or double sided. (If you are going to be using an 800K diskette in a 400K drive as well as in the Apple 3.5 Drive, you will have to initialize it as single sided — otherwise the 400K drive will not be able to read it.)

Inserting and Ejecting Diskettes

The Apple 3.5 Drive has an automatic diskette insert and eject system. The diskette is automatically ejected from the drive either by pressing the eject button or by using a software command. The eject cycle works only when the drive is under power.

> ***Note:*** When the Apple 3.5 Drive is connected to a Macintosh, the eject button on the front of the drive is automatically deactivated because Macintosh software controls disk ejection. The eject button works only when the drive is connected to an Apple IIGS.

The insert cycle starts when the diskette is partially inserted into the drive, triggering a loaded spring that completes the cycle automatically.

CAUTION: *Make sure the Macintosh or Apple IIGS is powered off before connecting the disk drive to a built-in port. Failure to do so can result in damage to the drive and/or the computer's logic board.*

Drive Mechanism Packaging

When sending in the Apple 3.5 Drive 800K mechanism for exchange, it **must** be shipped in the Apple-approved packaging, which includes the shipping fixture and the protective packing diskette. Refer to the Illustrated Parts List for additional packaging information.

Apple Technical Procedures

Apple 3.5 Drive

Section 2 – Take-Apart

❑ CONTENTS

2.3 Case
2.5 External Drive Cable and Shield
2.7 Daisy Chain Interface Board
2.9 800K Drive Mechanism
2.12 Eject Switch Assembly
2.13 LED Assembly

Note: If a step is underlined, detailed instructions for that step can be found elsewhere in this section.

❑ CASE

Materials Required

Small Phillips screwdriver

Remove

To remove the case:

1. Place the Apple 3.5 Drive upside down on a padded surface.

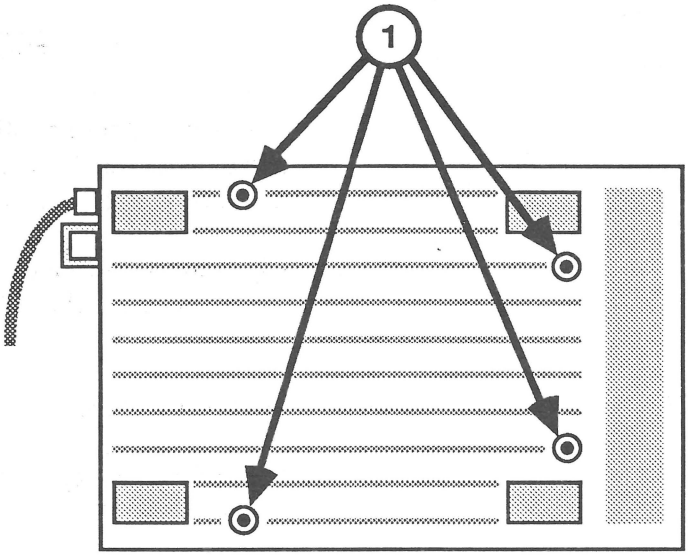

FIGURE 1

2. Remove the four screws from the case bottom (Figure 1, #1).

3. Lift off the case bottom.

4. Pull the external drive cable anchor free of the tab on the case top.

5. Grip the case top in one hand and the drive assembly in the other. Carefully slide the drive assembly as far as it will go toward the cable end.

6. Lift the drive assembly out of the case top, and set the case top and the drive assembly next to each other on the padded surface.

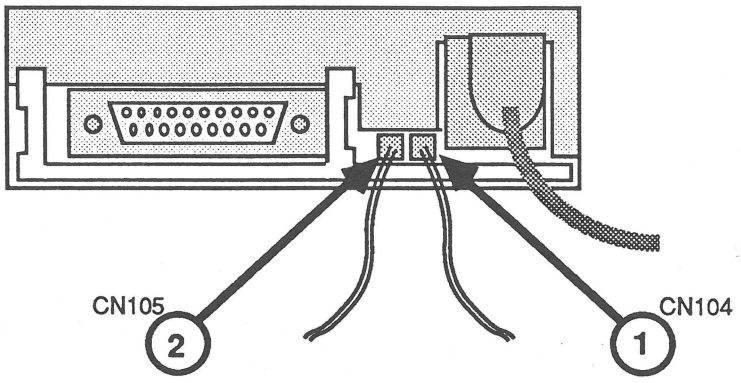

FIGURE 2

7. Using needlenose pliers if necessary, carefully disconnect the LED cable from CN104 on the drive assembly (Figure 2, #1).

8. Disconnect the eject button cable from CN105 on the drive assembly (Figure 2, #2).

Replace

To replace the case:

1. Reconnect the eject button cable to CN105 (Figure 2, #2).

2. Reconnect the LED cable to CN104 (Figure 2, #1) on the drive assembly.

3. Slide the drive assembly into the case top, making sure the metal tabs on the drive assembly fit flush against the inside of the case top. Tuck the LED cable and the eject button cable out of the way inside the edges of the case top.

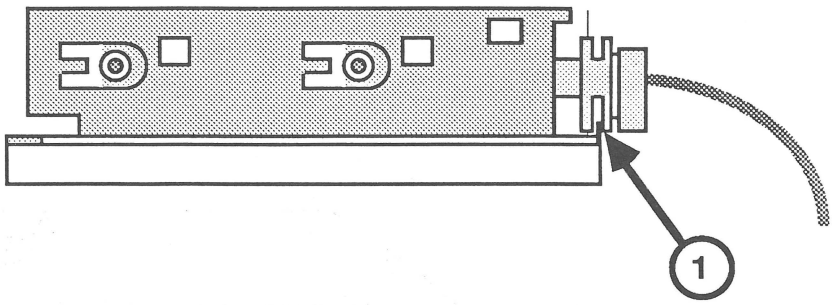

FIGURE 3

4. Now slide the drive assembly towards the front of the case top as far as it will go, so that the outermost groove on the external drive cable anchor fits over the tab on the edge of the case top (Figure 3, #1).

5. Place the case bottom over the drive assembly, fitting the external drive cable opening over the external drive cable anchor. Press the case top firmly into place.

6. Replace the four bottom screws.

❑ EXTERNAL DRIVE CABLE AND SHIELD

Materials Required Small Phillips screwdriver

Remove To remove the external drive cable and shield:

1. Remove the case.

...Continued on next page

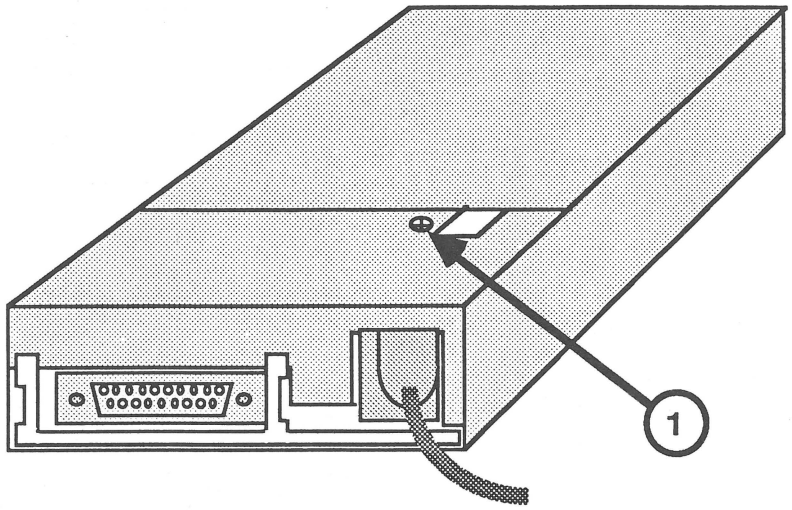

FIGURE 4

2. Remove the screw on the external drive cable shield (Figure 4, #1).

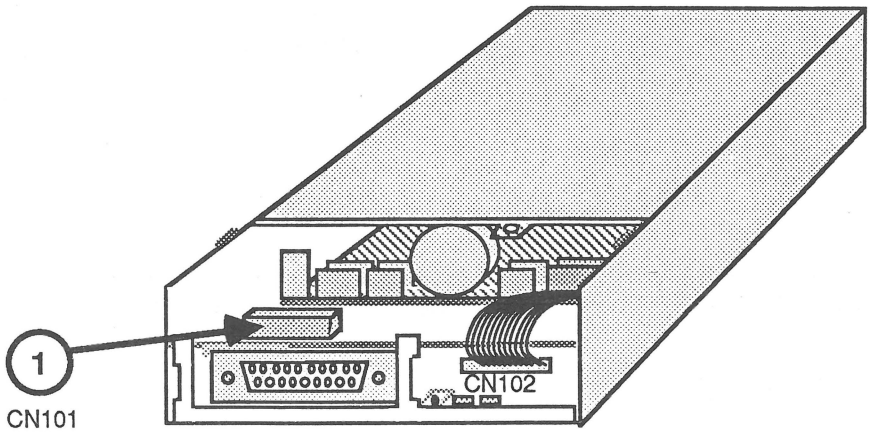

FIGURE 5

3. Disconnect the external drive cable from CN101 on the drive assembly (Figure 5, #1).

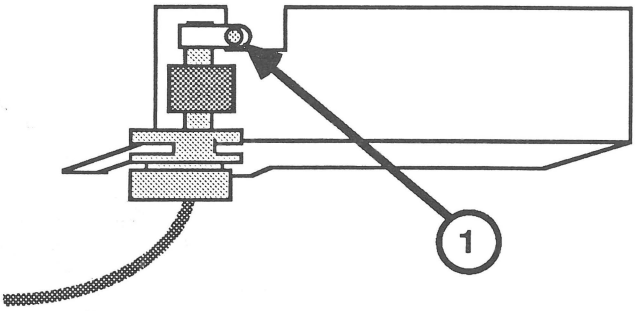

FIGURE 6

4. If you are replacing either the external drive cable or the shield, first separate them by removing the ground screw (Figure 6, #1)

Replace

To replace the external drive cable and shield:

1. Replace the ground screw if you removed it (Figure 6, #1).
2. Position the external drive cable and shield onto the drive assembly.
3. Connect the external drive cable to CN101 on the drive assembly (Figure 5, #1).
4. Replace the screw on the external drive cable shield (Figure 4, #1).
5. Replace the case.

❑ DAISY CHAIN INTERFACE BOARD

Materials Required

Small Phillips screwdriver

Remove

To remove the daisy chain interface board:

1. Remove the case and the external cable and shield.

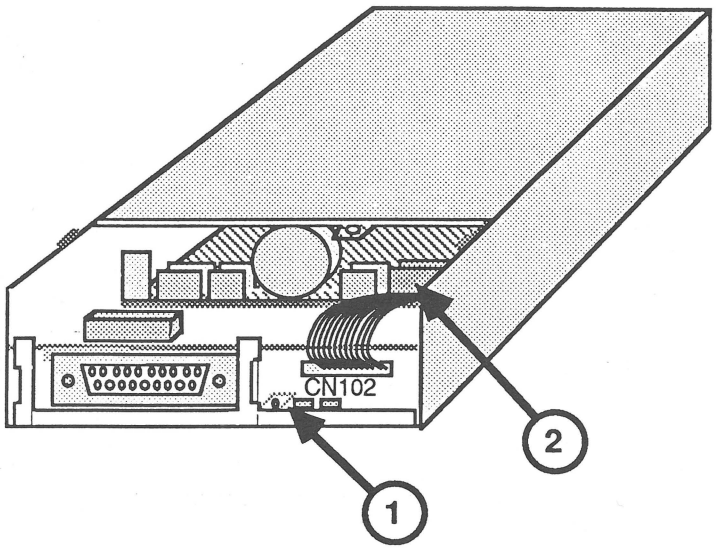

FIGURE 7

2. Disconnect CN102 from the drive mechanism (Figure 7, #2).

3. Remove the screw that secures the daisy chain interface board to the outer metal shield (Figure 7, #1).

4. Slide the daisy chain interface board to the right and lift it out.

Replace

To replace the daisy chain interface board:

1. Tuck the back edge of the daisy chain interface board under the holding tabs on the outer metal shield (Figure 7, #2).

2. Slide the board to the left as far as it will go and replace the screw (Figure 7, #1).

3. Replace the 800K drive mechanism, if you removed it.

4. Reconnect CN102 to the drive mechanism (Figure 7, #2).

5. Replace the drive cable and shield and the case.

❑ 800K DRIVE MECHANISM

Materials Required

Small Phillips screwdriver
Small flatblade screwdriver

Remove

To remove the 800K drive mechanism:

1. Remove the case and the external cable and shield.

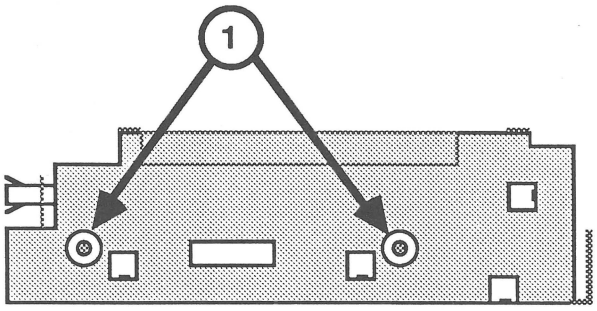

FIGURE 8

2. Remove the two screws from each side of the outer metal shield (Figure 8, #1).

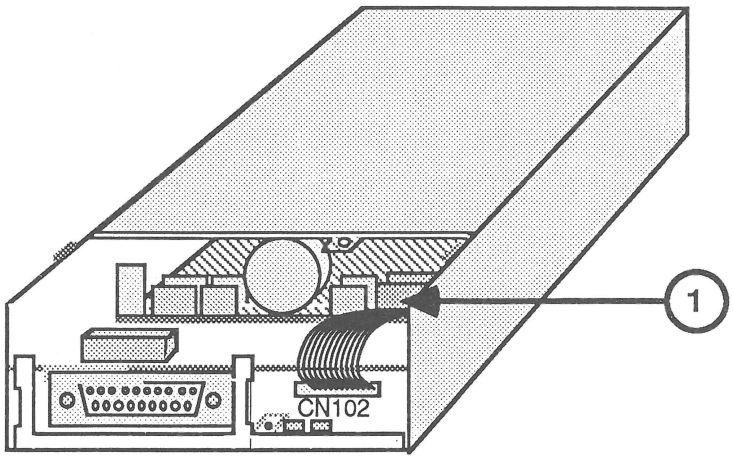

FIGURE 9

3. Disconnect CN102 from the drive mechanism (Figure 9, #1).

4. Slide the 800K drive mechanism out of the outer metal shield (away from the external cable end).

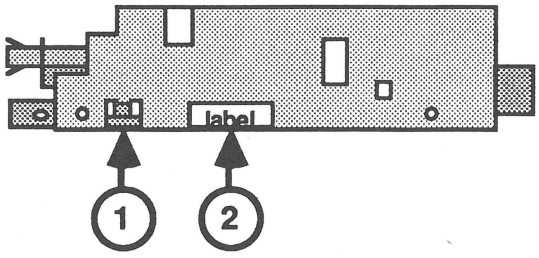

FIGURE 10

5. Slide the inner metal shield in the direction of the arrow in Figure 9 until the tabs on each side (Figure 10, #1) clear the holes; then lift off the shield. (If this is difficult, try carefully inserting a small flat-blade screwdriver under the shield to free it from the tabs.)

   Note: Send the drive mechanism back to Apple **WITHOUT the inner metal shield**. (Save the shield to put on the replacement drive mechanism.) The drive mechanism **MUST** be sent back to Apple **in the Apple-approved shipping fixture**, with the packing diskette installed in the drive. See the Illustrated Parts List for more packaging information.

Replace

To replace the 800K mechanism:

1. If necessary, remove the shipping fixture from the new 800K drive mechanism. Then place the inner metal shield over the 800K drive mechanism, matching the label on the mechanism to the cutout on the shield (Figure 10, #2). Snap the shield into place.

2. Slide the drive mechanism into the outer metal shield, making sure the end with connector CN102 goes in first.

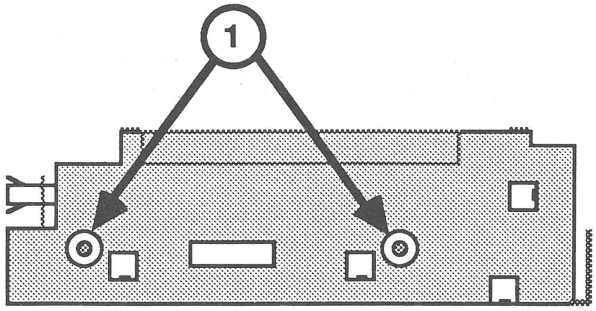

FIGURE 11

3. Replace the two screws on each side of the outer metal shield (Figure 11, #1).

4. Replace the daisy chain interface board, if you removed it.

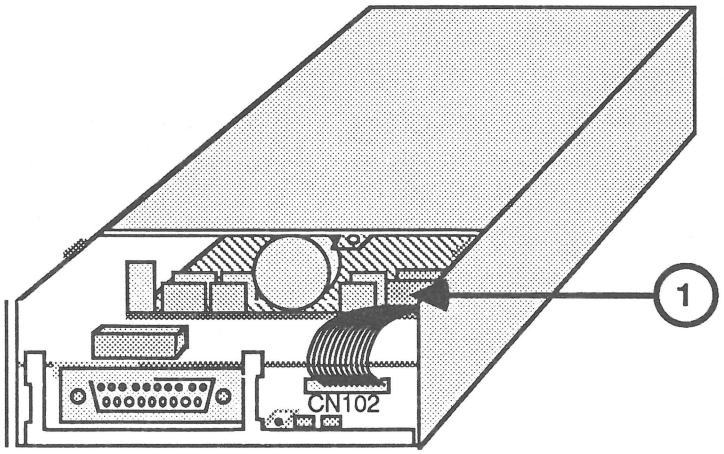

FIGURE 12

5. Connect the cable at CN102 on the daisy chain board to the drive mechanism (Figure 12, #1).

6. Replace the external drive cable and shield.

7. Replace the case.

❑ EJECT SWITCH ASSEMBLY

Materials Required

Small Phillips screwdriver

Remove

To remove the eject switch assembly:

1. Remove the case.

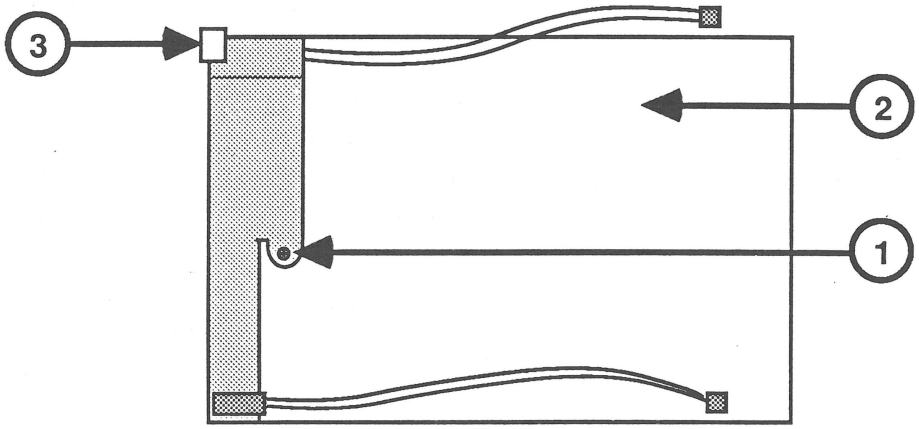

FIGURE 13

2. Remove the screw (Figure 13, #1) that secures the metal bracket to the case top (Figure 13, #2).

3. Lift the eject switch assembly (Figure 13, #3) off the holding tabs.

Replace

To replace the eject switch:

1. Position the eject switch (Figure 13, #3) over the holding tabs.

2. Replace the screw (Figure 13, #1) that secures the metal bracket to the case top.

3. Replace the case.

❑ LED ASSEMBLY

Materials Required

Small Phillips screwdriver

Remove

To remove the LED assembly:

1. Remove the case.

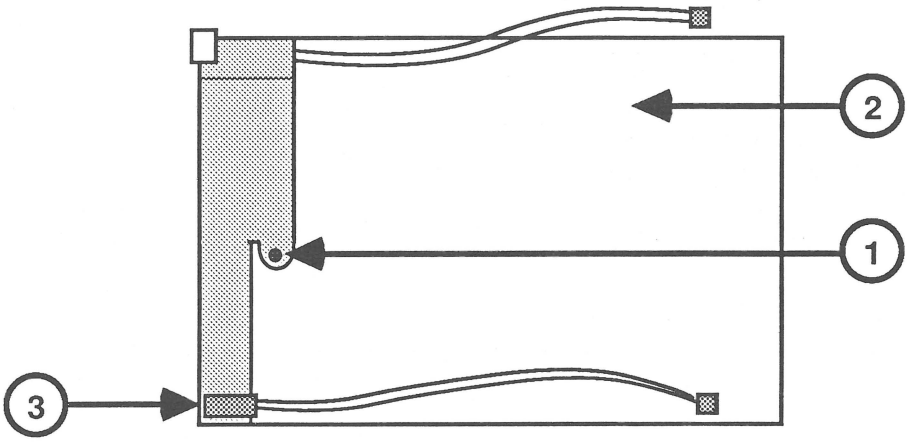

FIGURE 14

2. Remove the screw (Figure 14, #1) that secures the metal bracket to the case top (Figure 14, #2).

3. Lift the LED assembly (Figure 14, #3) off the holding tabs.

Replace

To replace the LED assembly:

1. Position the LED assembly (Figure 14, #3) over the holding tabs.

2. Replace the screw (Figure 14, #1) that secures the metal bracket to the case top.

3. Replace the case.

Apple Technical Procedures

Apple 3.5 Drive

Section 3 – Diagnostics

❑ CONTENTS

3.2 Introduction
3.2 Using System Utilities (Apple IIGS)
3.3 Formatting
3.5 Copying
3.6 Booting from the Apple 3.5 Drive

❑ INTRODUCTION

The Apple 3.5 Drive may be tested on either the Macintosh or the Apple IIGS.

1. On the Macintosh, use MacTest to do a read/write test. (Refer to the *Macintosh Technical Procedures*, Section 2, Diagnostics.)

   Note: Second and later repetitions of MacTest on an Apple 3.5 Drive may cause the "in use" LED to remain on throughout the test, even when the drive is not actually in motion. This will cause no harm and may be ignored.

2. On the Apple IIGS, use *System Utilities* to test the read/write functions of the drive as it demonstrates formatting, copying, and booting.

❑ USING SYSTEM UTILITIES (APPLE IIGS)

Introduction

The *System Utilities* diskette (version 2.1 or higher) may be used to test various functions of the Apple 3.5 Drive, among them the three procedures in this section:

1. Formatting a diskette in the Apple 3.5 Drive.

2. Copying all the files from the *System Utilities* diskette onto the formatted diskette.

3. Booting directly from the Apple 3.5 Drive using the boot diskette just created.

If the Apple 3.5 Drive displays any problems with these procedures, turn to Section 4, Troubleshooting.

Note: Refer to the *System Utilities* manual and the *Apple IIGS Owner's Guide* for more information if you are uncertain how to use the diskette with the Apple IIGS.

Materials Required

Apple IIGS
Apple 3.5 Drive to be tested
Apple 5.25 Drive or UniDisk
Disk controller card
System Utilities diskette (5.25" format)
Blank 3.5" diskette

Formatting

1. Connect the Apple 3.5 Drive to the drive port. Install an Apple 5.25 Drive (or UniDisk) in slot 6 with a disk controller card.

2. Insert the *System Utilities* diskette in the 5.25 drive.

3. Hold down <Option> and <Escape> while you power on the system. When the ROM menu comes up, type 1 to access the Control Panel.

4. Configure the Control Panel as follows:

   Slot 6: **<YOUR CARD>** (for the 5.25 drive)
   Slot 5: **<SMART PORT>** (for the 3.5 drive)
   Startup Slot: **6**

   Note: Use the up and down arrows to move from one line to another, and the left and right arrows to change the designation for each line. CAPITAL LETTERS indicate that a choice is currently selected.

   When the slots are configured correctly, press <Return>.

5. To exit the Control Panel, select **<QUIT>** and press <Return>.

   The system will boot from the 5.25 drive.

6. When asked **Prefer 80 column display?**, type Y.

7. When the *System Utilities* menu appears, use the arrows to select **<FORMAT A DISK>** and press <Return>.

8. When asked **Where is your disk?**, select **<SLOT AND DRIVE>** and press <Return>.

Note: Do not be confused if **<SLOT AND DRIVE>** is the only selection listed. Simply make sure it is selected (in capital letters) and press <Return>.

9. The screen will now appear as below:

   Slot: [N] (this could be any number from 1 to 7)

   Type 5 (because you will be placing your blank diskette to be formatted in the 3.5 Drive, which is designated for slot 5).

10. The screen will now appear as below:

    Slot: [5] Drive: [N] (any number from 1 to 7)

    Type 1 (because there is only one drive associated with slot 5).

11. The screen will now appear as below:

    Using Slot 5, Drive 1
    Select the operating system:

    Use the arrows to highlight **<PRODOS>** and press <Return>.

12. The screen now shows:

    Using Slot 5, Drive 1
    Operating System: ProDos
    Enter Name of New Volume: /BLANKN.....

    Enter any name you wish and press <Return>.

13. Place the blank diskette to be formatted in the Apple 3.5 Drive. Press <Return>.

14. If the diskette was previously formatted, you will be asked **Is it okay to destroy /OLDNAME?** Select **<YES>** and press <Return>.

    The formatting will begin. At its conclusion the message will appear: **Formatting: ....Done!**

15. Press <Return>. Then press <Escape> to return to the *System Utilities* menu.

Copying

1. From the *System Utilities* menu, select **<COPY FILES>** and press <Return>.

2. When asked **Where is your source disk?**, select **<SLOT AND DRIVE>** and press <Return>.

3. The screen will now appear as below:

   Slot: [N]

   Type 6 (because the *System Utilities* diskette you will be copying is in the 5.25 drive, which is designated for slot 6).

4. The screen will now appear as below:

   Slot: [6] Drive: [N]

   Type 1 (because there is only one drive associated with slot 6).

5. When asked **Where is your destination disk?**, select **<SLOT AND DRIVE>** and press <Return>.

6. The screen will now appear as below

   Slot: [N]

   Type 5 (because the blank formatted diskette you will be copying to is in the Apple 3.5 Drive, which is designated for slot 5).

7. The screen now shows:

   Slot: [5] Drive: [N]

   Type 1 (because there is only one drive associated with slot 5).

8. The screen will now appear as below:

   Source disk: Slot 6, Drive 1
   Destination disk: Slot 5, Drive 1

9. When asked **Select some or all files on this disk?**, select **<ALL>** and press <Return>.

10. The copying will begin. At its conclusion, the message will appear: **Copying complete!**

11. Press <Escape> to return to the *System Utilities* menu.

12. Select **<EXIT SYSTEM UTILITIES>** and press <Return>.

13. When asked **Are you sure you want to leave System Utilities?**, select **<YES>** and press <Return>.

Booting from the Apple 3.5 Drive

1. Press <Option>–<Control>–<Reset> to return to the ROM menu.

2. Type 1 to access the Control Panel.

3. Configure the Control Panel as follows:

   Slot 6: **<YOUR CARD>** (for the 5.25 drive)
   Slot 5: **<SMART PORT>** (for the 3.5 drive)
   Startup Slot: **5**

   Press <Return>.

4. Select **<QUIT>** and press <Return> to exit the Control Panel.

   The system will boot the *System Utilities* from the new diskette in the Apple 3.5 Drive.

   Note: If the Apple 3.5 Drive has performed all of these procedures, it is functioning normally.

5. Power off the system.

Apple Technical Procedures

Apple 3.5 Drive

Section 4 – Troubleshooting

❑ CONTENTS

4.2 Using the Apple 3.5 Drive Symptom Chart
4.3 Apple 3.5 Drive Symptom Chart

❑ USING THE APPLE 3.5 DRIVE SYMPTOM CHART

Troubleshooting Rules

General rules for troubleshooting the Apple 3.5 Drive are:

1. Use known-good software. (It can save you a lot of time!)

2. Be sure the cable is installed securely in the external disk drive port (on the Macintosh).

3. Be sure you are addressing the correct slot (on the Apple IIGS).

4. If the Apple 3.5 Drive demonstrates a symptom listed on the chart, replace modules or parts in the order listed under the corrective action(s). If a corrective action does not fix the problem, the original module or part should be reinstalled before the next step is performed.

❑ APPLE 3.5 DRIVE SYMPTOM CHART

Symptom	Corrective Action
• *Drive will not come on; LED flashes once or does not light*	1. If the Apple 3.5 Drive 800K mechanical assembly is being used in the Macintosh internal drive, check to make sure the logic-board-to-drive cable is **yellow**, not red. 2. Swap drive mechanism. 3. Swap external drive cable. 4. Swap LED assembly.
• *Drive will read but not write*	1. Swap drive mechanism. 2. Swap external drive cable.
• *Drive will not read, but LED comes on*	1. Check software. 2. Swap drive mechanism.
• *Drive will not eject disk*	1. Swap drive mechanism. 2. Swap eject switch cable assembly.
• *Drive functions, but LED does not light*	1. Swap LED assembly. 2. Swap drive mechanism.
• *Drive ejects known-good system disks, but reads/writes after booting from another disk*	1. Try different disk. 2. Replace disk cable. 3. Replace mechanical assembly.
• *Drive reads and writes, but does not eject*	– Replace mechanical assembly.
• *Internal 3.5-inch drive on Macintosh Plus ejects continuously*	– Make sure drive cable has a yellow stripe and not a red stripe. (Refer to the latest internal cable compatibility chart.)

Symptom	Corrective Action
• *When one or more Apple 3.5 drives are daisy-chained to a DuoDisk or to one or more UniDisk 5.25 drives, the drive(s) suddenly start to spin and can no longer be accessed by the Apple IIGS*	– Check the part number on the gate array component on the daisy chain interface board. If the part number indicates a Revision A board (CXD1085A), replace the board with a Revision B board (CXD1085B).

Apple Technical Procedures

Apple 3.5 Drive

Section 5 – Additional Procedures

❑ CONTENTS

5.2 Apple 3.5 Drive Spinning Problem
5.3 Replacing the Revision A Board

Note: If a step is underlined, instructions for that step can be found in Section 2, Take-Apart.

❑ APPLE 3.5 DRIVE SPINNING PROBLEM

In certain configurations a spinning problem may occur when Apple 3.5 drives and UniDisk 5.25 drives are daisy-chained and connected to an Apple IIGS. When this happens, one or more of the drives suddenly start to spin and can no longer be accessed. The problem **only** occurs on Apple 3.5 drives with Revision A daisy chain interface boards in the following configurations:

- An Apple IIGS with one or more Apple 3.5 drives attached, and one or more UniDisk 5.25 drives daisy-chained to one of the Apple 3.5 drives.

- An Apple IIGS with one or more Apple 3.5 drives attached, and a DuoDisk daisy-chained to one of the 3.5 drives.

The spinning problem is the result of electrostatic buildup within the circuitry of the Revision A daisy chain interface board. This problem causes no permanent damage to the drive, and normal functioning returns if the system is powered off and back on.

If an Apple 3.5 drive exhibits the spinning problem while in one of the configurations described above, replace the Revision A daisy chain interface board with a Revision B board.

***IMPORTANT:** Do not replace the Revision A board unless the drive has exhibited the spinning problem. Only when used in the configurations described above does the Revision A board have a performance problem.*

Replacing the Revision A Board

To identify and replace the Revision A daisy chain interface board:

1. Place the Apple 3.5 Drive on the grounded workbench pad.

2. Remove the case, the external cable and shield, and the daisy chain interface board. (Refer to Section 2, Take-Apart, if necessary).

3. Locate the part number on the gate array component (Figure 1, #1). The gate array is located on the side of the daisy chain interface board without a cable. Part number CXD1085A indicates a Revision A board, and part number CXD1085B indicates a Revision B board. **If the part number is CXD1085A (Figure 1, #1), replace the Revision A board with a Revision B board.**

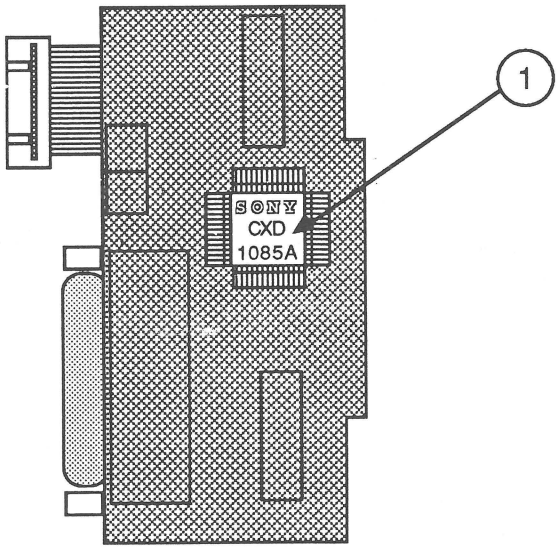

FIGURE 1

Apple 3.5 Drive

Illustrated Parts List

❑ CONTENTS

IPL.3 Finished-Goods Assembly (Figure 1)
IPL.5 Service Packaging, 800K/1.4 MB Drives (Figure 2)

The figures and lists in this section include all piece parts that can be purchased separately from Apple for the Apple 3.5 Drive, along with their part numbers. These are the only parts available from Apple. Refer to your *Apple Service Programs Manual* for prices.

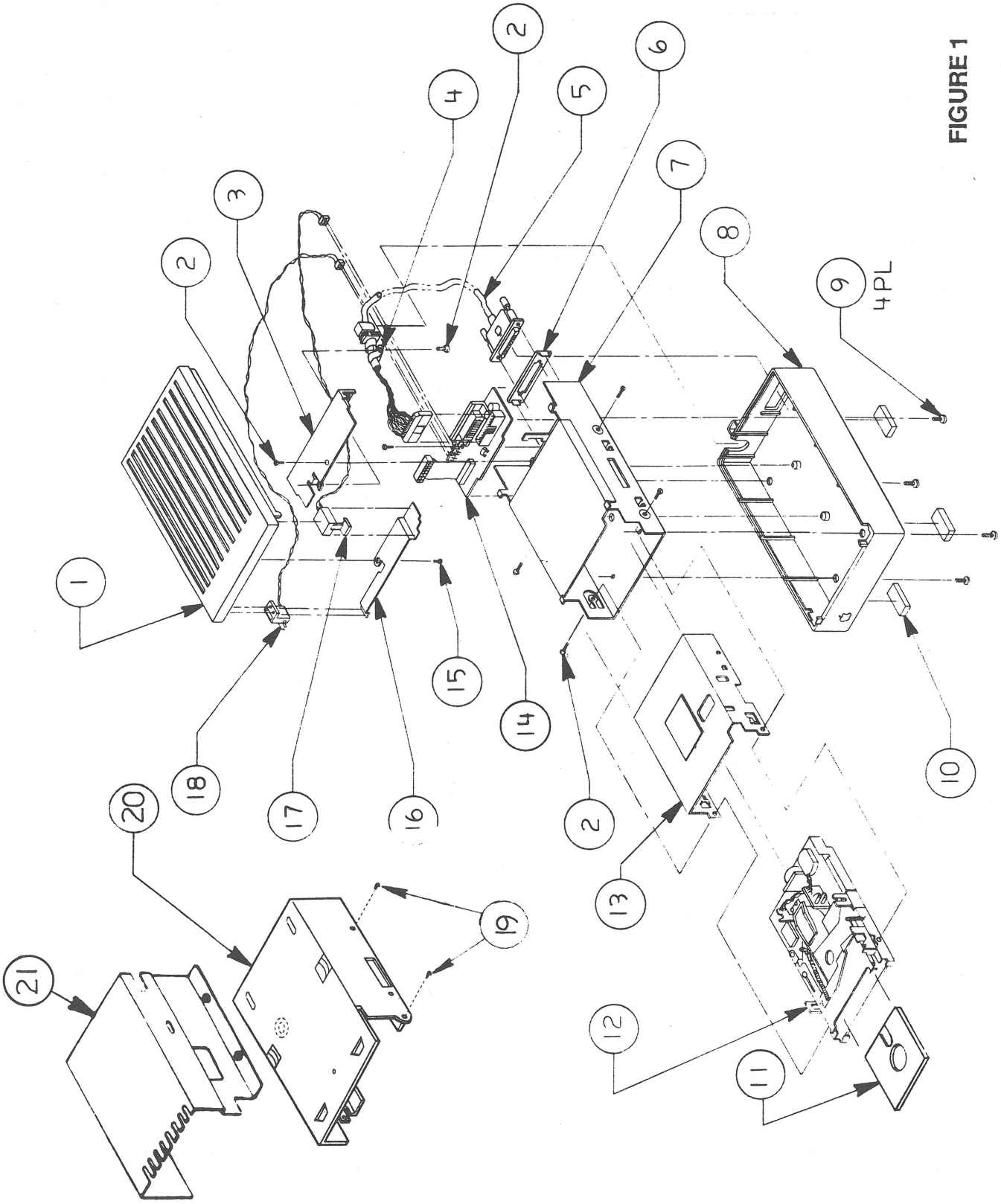

FIGURE 1

❑ FINISHED-GOODS ASSEMBLY (Figure 1)

Item	Part No.	Description
1	815-0955	Plastic Top Case, Platinum
2	416-1304	Metal Shield Screw
3	805-0807	External Drive Cable Shield
4	805-0378	External Drive Cable Clamp
5	590-4360	External Drive Cable (replacing part number 590-0360)
6	815-0969	Plastic Daisy-Chain Cover
7	603-5106	Outer Metal Shield
8	815-0956	Plastic Bottom Case, Platinum
9	416-1305	Plastic Case Screw
10	865-0045	Plastic Case Foot
11	003-0003	Packing Disk (for transporting)
12	661-0345	800K Mechanism, Apple 3.5 Drive (Red on Silver Label)
13	805-0156	Inner Metal Shield
14	076-0234	Daisy-Chain Interface Board
15	420-1011	Eject Switch Bracket Screw
16	805-0811	Eject Switch Bracket
17	603-5110	Eject Switch Cable Assembly
18	603-5109	LED Cable Assembly
19	462-3401	Screw, M 3 x 6, with two washers
20	805-5050	Floppy Metal Housing (for transporting)
21	805-0217	800K Internal Drive Shield (for transporting)

Note: The floppy metal housing for transporting is required when using using 1.4 MB drive packaging.

The 800K internal drive shield for transporting is required when using 800K drive packaging.

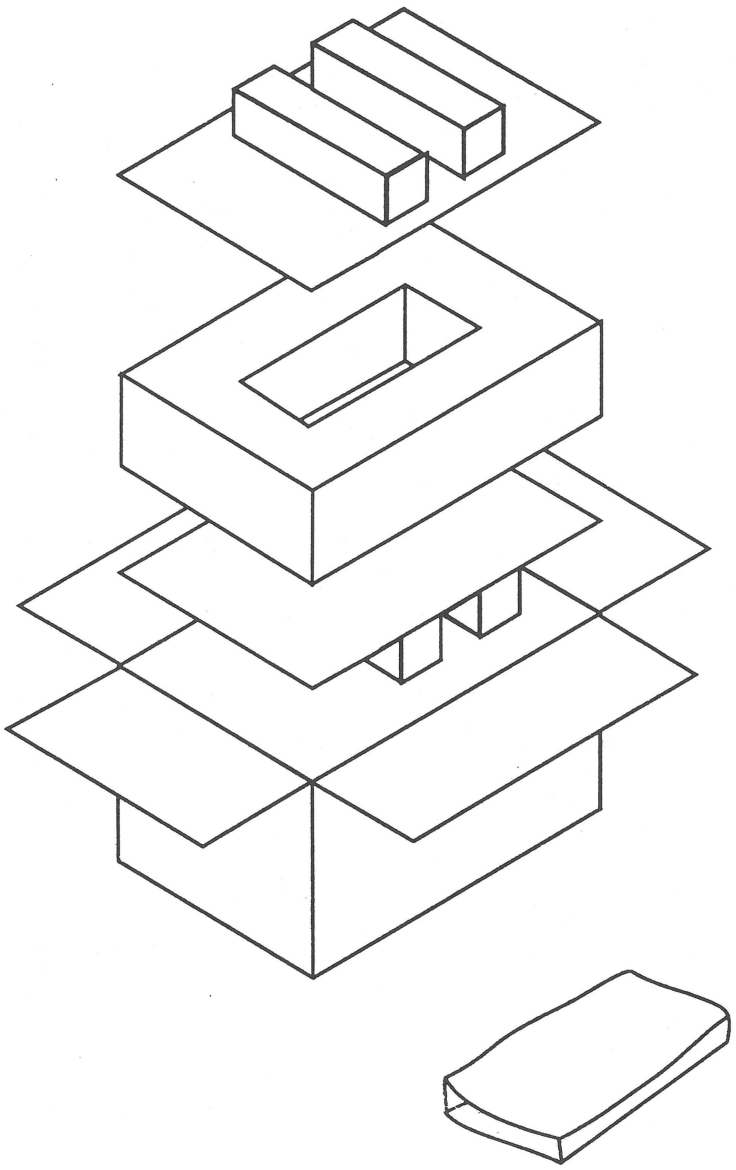

FIGURE 2

❑ SERVICE PACKAGING, 800K/1.4 MB DRIVES (Figure 2)

Item	Part No.	Description
–	602-0210	Service Packaging, 800K/1.4 MB Drives

Apple Technical Procedures

SCSI Hard Disk Drives

Technical Procedures

❑ TABLE OF CONTENTS

Section 1 – Basics	1.2	Product Description
	1.2	Small Computer System Interface
	1.2	SCSI Advantages
	1.2	SCSI Hard Disk Features
	1.4	Care and Handling
	1.4	Handling Precautions
	1.4	ESD Prevention
	1.5	Using SCSI Drives with Macintosh Systems
	1.5	Setting Priority Numbers
	1.6	Switching On/Off
	1.6	Reinitializing
	1.7	Disk First Aid
	1.10	Using SCSI Drives with Apple II Systems
	1.10	General Information
	1.10	Installing the SCSI Interface Card
	1.11	Setting Priority Numbers
	1.11	Reinitializing a SCSI Hard Disk
Section 2 – Take-Apart	2.2	Introduction
	2.2	Drive Mechanisms
	2.2	Service Module Configurations
	2.3	Returning Modules to Apple
	2.4	Case Top
	2.6	Power Supply
	2.8	Hard Disk Assembly
	2.10	Identifying 20SC Revision A and B Drives
	2.10	Reconfiguring Service Modules
	2.16	SCSI Select Switch Cable
	2.17	LED Cable Assembly
	2.21	Fan Frame
	2.24	Fan
	2.25	HDA-to-Case Cable
	2.26	SCSI Select Switch

Section 3 – Diagnostics

3.2 Test Versions
3.2 Tests Run on the Macintosh
3.2 Tests Run on the Apple II
3.3 Macintosh Hard Disk Drive Diagnostic
3.3 Introduction
3.3 Materials Required
3.3 Running the Test
3.8 Using the Test Selections Subwindow
3.10 Using the Pull-Down Menus
3.12 Apple II SCSI Diagnostic
3.12 General Information
3.13 Things to Remember
3.14 Materials Required
3.14 Making Selections
3.15 Using the Test Selections Menu
3.16 Using the SCSI Drive's Main Menu
3.19 Running the Diagnostic

Section 4 – Troubleshooting

4.2 Introduction
4.3 Things to Remember
4.4 Macintosh—SCSI Hard Disk Drives
4.5 Flowchart 1
4.6 Apple IIe/IIGS—SCSI Hard Disk Drives
4.7 Flowchart 2A
4.9 Flowchart 2B

Section 5 – SCSI Interface Card

This section has moved to *Apple II Family Cards.*

Section 6 – Additional Procedures

6.2 Macintosh Hard Disk 20SC Upgrade
6.4 Hard Disk Startup Problem
6.6 Macintosh Hard Disk 40SC/80SC Upgrade

Illustrated Parts List

IPL.3 Complete Assembly (Figure 1)
IPL.5 External Hard Disk Assembly (HDA) – 20SC 20SC/160SC (Figure 2)
IPL.7 Hard Disk Assembly (HDA) – 40SC/80SC (Figure 3)
IPL.9 Hard Disk Assembly (HDA) – 3.5-Inch 160 MB (Figure 4)
IPL.11 SCSI Hard Disk Drives – Cables (Figure 5)
IPL.13 SCSI Hard Disk Drives – Service Packaging, 5.25 HDA (Figure 6)

©Apple Computer, Inc., 1986-1991. No portion of this document may be reproduced in any form without the written permission of Apple Computer, Inc.

MacTest and Disk First Aid are trademarks of Apple Computer, Inc.

Macintosh, Apple IIGS, Apple, and the Apple logo are registered trademarks of Apple Computer, Inc.

Apple Technical Procedures

SCSI Hard Disk Drives

Section 1 – Basics

❑ CONTENTS

1.2 Product Description
1.2 Small Computer System Interface
1.2 SCSI Advantages
1.2 SCSI Hard Disk Features
1.4 Care and Handling
1.4 Handling Precautions
1.4 ESD Prevention
1.5 Using SCSI Drives with Macintosh Systems
1.5 Setting Priority Numbers
1.6 Switching On/Off
1.6 Reinitializing
1.7 Disk First Aid
1.10 Using SCSI Drives with Apple II Systems
1.10 General Information
1.10 Installing the SCSI Interface Card
1.11 Setting Priority Numbers
1.11 Reinitializing a SCSI Hard Disk

❑ PRODUCT DESCRIPTION

Small Computer System Interface

The SCSI hard disk drives utilize the Small Computer System Interface (or SCSI), which is a method of sending information back and forth between the CPU and a variety of peripherals.

SCSI is a standard developed by engineers from many companies working together through the American National Standards Institute. This parallel interface is designed to work with devices of many types from many different manufacturers, thus increasing the flexibility and sophistication of the user's system.

SCSI Advantages

The Small Computer System Interface offers several advantages over earlier methods:

Speed: Information transfer between the computer and the peripheral is much faster because the SCSI device sends eight bits of data at the same time (parallel).

Flexibility: SCSI is a standard, so existing system software can be used to communicate with any of the many SCSI devices from different manufacturers.

Expandability: The Apple SCSI Cable System can be used to connect as many as seven SCSI devices to a Macintosh system, or up to six SCSI devices to an Apple II system (with two SCSI Interface Cards).

SCSI Hard Disk Features

SCSI hard disk drives of all storage capacities can provide expanded data storage for both the Apple II and Macintosh families of personal computers.

External versions of the SCSI drives can be connected directly to the SCSI port on the rear of the Macintosh computers, or to a SCSI Interface Card installed in any available slot in an Apple IIe or Apple IIGS computer.

The Hard Disk 20SC is the only SCSI drive that can be used with the Apple IIe without partitioning. Because ProDOS can handle only 32 MB, any SCSI drive with a storage capacity that exceeds this limit must be partitioned into volumes of 32 MB or less. If the SCSI interface card is installed in slot 5, up to four partitions can be created. (For more information, see "Using SCSI Drives with Apple II Systems.")

If you need additional data storage, you can connect another hard disk drive to the SCSI port at the rear of the first SCSI drive. On a Macintosh system, you can connect up to seven SCSI drives in this way. The ProDOS operating system supports up to six SCSI devices from two separate SCSI Interface Cards (as long as one of the cards is installed in slot 5 **and** slot 2 is left open).

The matrix below shows the storage capacities of the SCSI drives and the computers that use them efficiently.

SCSI Hard Disk Drives

Drive Size	Storage Capacity	Equivalent in 800K Disks [1]	Macintosh Family [2]	Apple[2] IIe	Apple[2] IIGS
3.5-inch	20 MB	25 disks	X	X	X
3.5-inch	40 MB	50 disks	X	X	X
3.5-inch	80 MB	100 disks	X	X	X
3.5-inch	160 MB	200 disks	X[3]		
5.25-inch	20 MB	25 disks	X	X	X
5.25-inch	40 MB	50 disks	X	X	X
5.25-inch	80 MB	100 disks	X	X	X
5.25-inch	160 MB	200 disks	X		

1.Gives equivalent storage capacity in number of double-sided 800K disks.
2.An X indicates that these systems can use the SCSI drive.
3.The 3.5-inch 160 MB drive is available only in the Macintosh IIfx and Macintosh IIci.

Note: All SCSI drives may be configured for internal and external use with the exception of the 3.5-inch 160 MB drive, which is available only as an internal drive. All service modules (except the 160SC and the 3.5-inch 160 MB drives) need to be reconfigured for external use. See "Hard Disk Assembly" in Section 2, Take-Apart, for more information.

❑ CARE AND HANDLING

Handling Precautions

The SCSI hard disk drives are mechanical devices with moving parts. Rough handling such as jarring or bumping, especially during operation, can cause a mechanical failure or can damage information stored on the hard disk. Careless handling accounts for more hard disk drive failures than all other factors combined. With this in mind, always be sure to:

- Leave the hard disk drive mechanisms in their shipping containers until you need them.
- Place the SCSI hard disk drive on a soft, grounded surface before beginning any repairs.
- Use the original shipping containers and packing materials when transporting hard disk drive mechanisms. (See the Illustrated Parts List for information about Apple-approved packaging.)
- Never move the drive during power-down. After power is turned off, the disks slow down, and (within 30 seconds) the heads will move to a safe position. Any jolts to the drive during the power-down period may cause the heads to crash.
- Never drop a SCSI hard disk drive. Even a slight drop could cause drive failure.

ESD Prevention

Some of the components in the drive are sensitive to electrostatic discharge (ESD), which may be generated by your body, clothing, or articles in the environment. With this in mind, be sure to:

- Keep the disk drive mechanism in its antistatic bag until you are ready to install it.
- Work on a grounded mat and use a grounding wriststrap.
- Keep common plastics, vinyl, polyester, and styrofoam away from the disk drive.
- Do not touch the circuit board unless grounded.

For complete ESD prevention information, refer to *You Oughta Know.*

❑ USING SCSI DRIVES WITH MACINTOSH SYSTEMS

Setting Priority Numbers

A priority number is what controls the accessing of all SCSI devices connected to a system. A separate priority number must be assigned to every SCSI device: one device, one number. This prevents two devices from sending data at the same time, which could damage files already saved.

The Macintosh SE or Macintosh II internal SCSI hard disk will have a priority number assigned automatically by the system. On the external hard disks, the priority number must be set by inserting an opened paper clip into the hole of the SCSI switch and clicking until the desired number is displayed. The SCSI select switch (Figure 1, #1) is located on the back of the hard disk case, below the SCSI ports (Figure 1, #2).

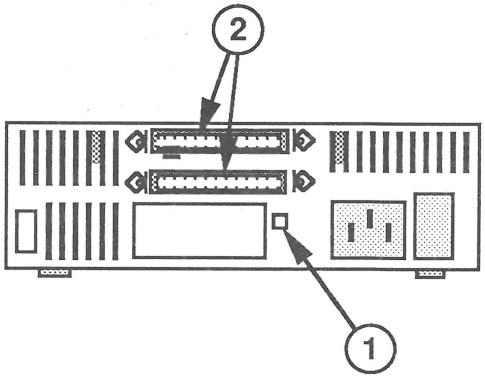

FIGURE 1

Switching On/Off

If you have connected an external SCSI hard disk to the external SCSI port of a Macintosh, turn on the hard disk before you turn on the computer. The hard disk will whir. Within 20 seconds the hard disk drive will be ready. Then power on the Macintosh.

In normal operation, the LED at the front of the SCSI hard disk indicates that the drive is in use. **Never turn off the power if the LED is on or you may lose data on the hard disk.** To power off, use the Macintosh shutdown procedure. The Macintosh will tell you when it can be switched off safely.

Reinitializing

Note: If you are trying to recover data from a customer's Macintosh-formatted SCSI drive, first try running *Disk First Aid* to repair the hard disk (see instructions in this section).

When you reinitialize a hard disk, all data on the disk is erased. If you **must** reinitialize, find out if the customer's files are backed up. Even if the hard disk is damaged, you may be able to back up files onto disks, tape, or another hard disk.

To reinitialize a SCSI hard disk with a Macintosh computer:

1. Set up the SCSI hard disk with a Macintosh computer.

2. Start up the most recent Macintosh *System Tools* disk.

3. Open the hard disk installer and follow the screen prompts to initialize the hard disk.

   Note: You must use version 1.4 (or higher) of the installer. If the installer program on your diagnostic disk is an earlier version, discard the old installer and copy the *Apple HD SC Setup* program from the *System Tools* or *Utilities* disk (version 2.0.1 or higher) to your diagnostic disk.

4. Recopy backed-up files onto the reinitialized hard disk.

Disk First Aid

Disk First Aid is a utility program that Apple provides with the Macintosh operating system software. Use *Disk First Aid* to repair any hard disks or double-sided 800K floppy disks that use the Macintosh hierarchical file system (HFS). *Disk First Aid* runs **only** on Macintosh-initialized hard disks or floppy disks.

Note: Be sure to use the latest version of the system software (currently version 6.0.7) and *Disk First Aid* program (version 1.4.3).

To use *Disk First Aid* to repair a SCSI hard disk:

1. If necessary, attach the external SCSI hard disk (to be repaired) to the Macintosh test station.

2. Boot the Macintosh test station from a *System Utilities* disk.

3. If necessary, turn on the SCSI hard disk and wait for the ready signal.

4. Load the *Disk First Aid* program.

5. The drive selection window, shown in Figure 2, lists an attached SCSI hard disk and gives its SCSI select number. If this is the drive you want to repair, click **Open**. If not, click **Drive** to change the selection.

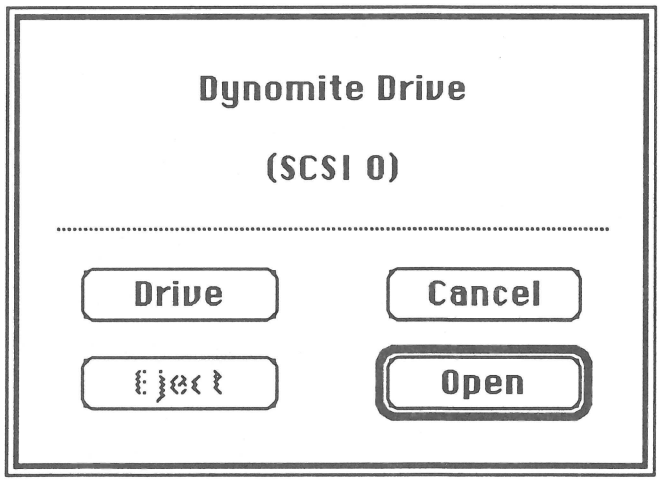

FIGURE 2

6. If the selected SCSI drive is also the system startup disk, you will see the window shown in Figure 3. *Disk First Aid* will not let you repair or erase the system disk, but it will allow you to verify it. If you want to verify the selected disk, click **OK**.

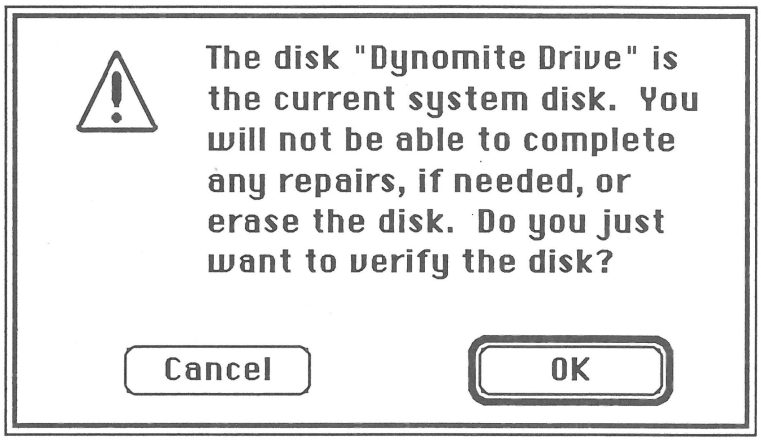

FIGURE 3

7. The **Ready to start** window shown in Figure 4 will appear onscreen. From this window, *if the drive being repaired is not the startup disk*, then you have the following options:

   - Select **Repair Automatically** from the **Options** menu. This option enables you to verify and simultaneously repair the selected disk volume.

   - Select **Erase Disk** from the **Options** menu. **Make sure all important data on the selected disk volume is backed up before using this option.**

8. Click **Start** to begin the verification (only), verification and repair, or erase disk procedure. You may stop the test at any time by clicking **Stop**. You may also temporarily halt the test by clicking **Pause**, and then **Resume**.

   The status (top) line will inform you when the test is finished and provides additional information about the status of the selected disk volume.

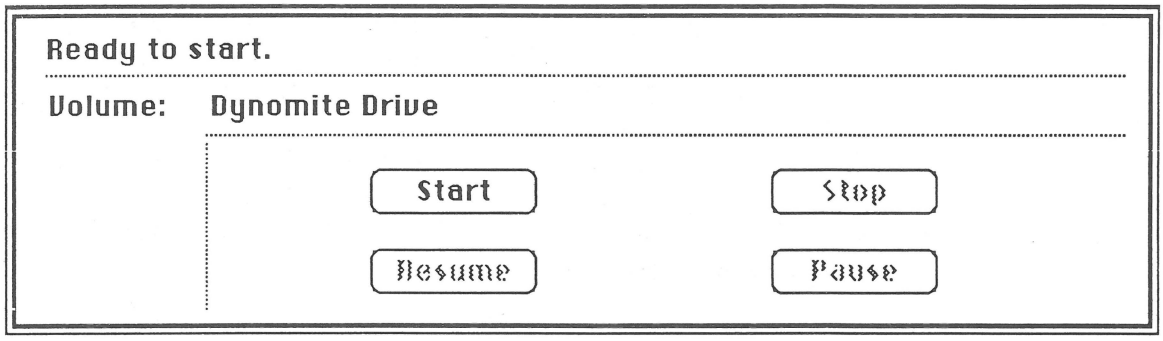

FIGURE 4

9. If you want to repair another attached SCSI hard drive, pull down the **File** menu and select **Close**. Then pull down the **File** menu again and select **Open Volume**. This selection returns you to the drive selection window (see Figure 2).

10. When you are finished, select **Quit** from the **File** menu.

❑ USING SCSI DRIVES WITH APPLE II SYSTEMS

General Information

Although the ProDOS operating system can handle only 32 megabytes of data, **external SCSI drives of all capacities can be connected to SCSI Interface Cards installed in Apple IIe or Apple IIGS computers.** Apple drives—up to and including the Hard Disk 80SC—can be partitioned to utilize 100% of their data storage capacity. A four-partition limit, however, makes much of the data capacity on the Hard Disk 160SC inaccessible.

Installing the SCSI Interface Card

Always insert the SCSI Interface Card into the system with the power off. Refer to the following chart when selecting a slot for the SCSI Interface Card.

Slot	Apple IIGS	Apple IIe
7	OK if no AppleTalk device is being used	OK unless another card is installed
6	OK if no Apple 5.25-inch drive is attached	OK if no disk drive is attached
5	OK if no Apple 3.5-inch drive is attached	OK if no disk drive is attached
4	Not recommended (reserved for the mouse)	OK unless another card is installed
3	Not recommended (reserved for 80-column video card)	Not recommended (reserved for 80-column video card)
2	OK if no serial device is connected to the modem port	OK if no modem or other serial device is being used
1	Not recommended	Not recommended

If you plan to test the SCSI Interface Card, the card must be installed in slot 2.

If you are using an Apple IIe and wish to boot directly from the SCSI drive, the SCSI Interface Card must be in a higher-numbered slot than any other card being used. Also make sure that the SCSI select switch on the hard disk is set at a lower number than the priority setting of the SCSI Interface Card.

If you need additional storage, you can daisy-chain another SCSI hard disk drive to the first SCSI drive, or install a second SCSI card and connect additional SCSI storage devices to it.

Setting Priority Numbers

For information about setting priorities among devices, see Section 1, SCSI Interface Card, in the *Apple II Family Cards Technical Procedures.*

Reinitializing a SCSI Hard Disk

Remember—when you reinitialize a hard disk, all data on the disk is erased. If you **must** reinitialize, make sure that you back up any files that the customer has not already backed up.

To reinitialize a SCSI hard disk with an Apple IIe or Apple IIGS:

1. Set up the SCSI hard disk with an Apple II computer.
2. Insert the most recent Apple II *System Utilities* disk.

   Use *System Utilities* version 3.0 or higher for:
   - Apple IIGS
   - Enhanced Apple IIe
   - Apple IIe with a logic board of rev. C or higher

   Use *System Utilities* version 2.1.1 for:
   - Unenhanced Apple IIe
3. Open the hard disk installer and follow the screen prompts to initialize the hard disk.
4. Recopy backed-up files onto the reinitialized hard disk.

Apple Technical Procedures

SCSI Hard Disk Drives

Section 2 – Take-Apart

❑ CONTENTS

2.2 Introduction
2.2 Drive Mechanisms
2.2 Service Module Configurations
2.3 Returning Modules to Apple
2.4 Case Top
2.6 Power Supply
2.8 Hard Disk Assembly
2.10 Identifying 20SC Revision A and B Drives
2.10 Reconfiguring Service Modules
2.16 SCSI Select Switch Cable
2.17 LED Cable Assembly
2.21 Fan Frame
2.24 Fan
2.25 HDA-to-Case Cable
2.26 SCSI Select Switch

Note: If a step is underlined, detailed instructions for that step can be found elsewhere in this section.

❑ INTRODUCTION

This section gives take-apart directions for external SCSI drives. To replace an internal SCSI drive, refer to the Take-Apart section for the appropriate CPU in *Apple Service Technical Procedures.*

The figures in this section show a typical 5.25-inch drive assembly. Individual drives are shown whenever differences in design could affect a procedure. When the procedure itself differs between drive models, a note appears in the text.

Drive Mechanisms

All external SCSI drives, regardless of size or storage capacity, are installed in the same plastic case and mounted on the same, full-size metal mounting frame. Mounting procedures are similar for both 5.25-inch and 3.5-inch drive assemblies (see "Hard Disk Assembly"). The 5.25-inch hard disk assembly fills the allotted space within an external case; the 3.25-inch assembly does not.

Service Module Configurations

All SCSI hard disk drive mechanisms can be used internally or externally with the exception of the 3.5-inch 160 MB drive (which is currently available only as an internal drive). Most SCSI drives are shipped in their internal configurations. Because of this, **all SCSI hard disk drive service modules (except the external 20 MB drive assembly) must be reconfigured for external use.** (See "Hard Disk Assembly" for information about reconfiguring service modules.)

Returning Modules To Apple

When returning a defective external SCSI drive to Apple, follow the guidelines outlined below.

Returning External 20 MB Drives

The 20 MB external drive (Hard Disk 20SC) is the only module that should be returned to Apple in its own frame. Return the LED assembly and SCSI select cable along with the defective drive assembly.

Returning All Other External Drives

When returning any other external SCSI drive to Apple, you must remove the defective drive from the customer's external frame and install it on the internal frame that was used to ship the service module. Return the power cable and extra resistor packs along with the defective drive assembly.

SCSI drive service modules are shipped with the cables listed in the chart below. If the service module includes a cable, be sure to return a cable of that same type to Apple.

	Power Cable	50-pin SCSI Cable	LED Cable	SCSI Select Cable
20 MB External	No	No	Yes	Yes
20 MB Internal	Yes	No	Yes	No
40 MB 5.25"	Yes	No	No	No
40 MB 3.5"	Yes	No	Yes	No
80 MB 5.25"	Yes	No	No	No
80 MB 3.5"	Yes	No	Yes	No
160 MB 5.25" (Internal)	Yes	No	No	No
160 MB 5.25" (External)	No	No	Yes	No
160 MB 3.5" (Internal)	No	No	No	No

❑ CASE TOP

Materials Required

#2 jeweler's screwdriver

Remove

Follow the steps below to remove the case top:

1. Locate the two holding tabs (Figure 1, #1) on the rear of the hard disk, within the ventilation slots on either side of the top SCSI connector.

2. Using a jeweler's screwdriver, press in gently on the lower end of each tab as you push the case top up slightly.

3. Locate the four tab holes, two on each side of the hard disk (see Figure 1, #2). Starting with the rear holes, free the tabs by gently inserting the screwdriver **straight** into each of the holes, nudging the case top up as you release each tab. **Prying is not necessary and may damage the case.**

4. When all tabs are released, lift the case top off the case bottom.

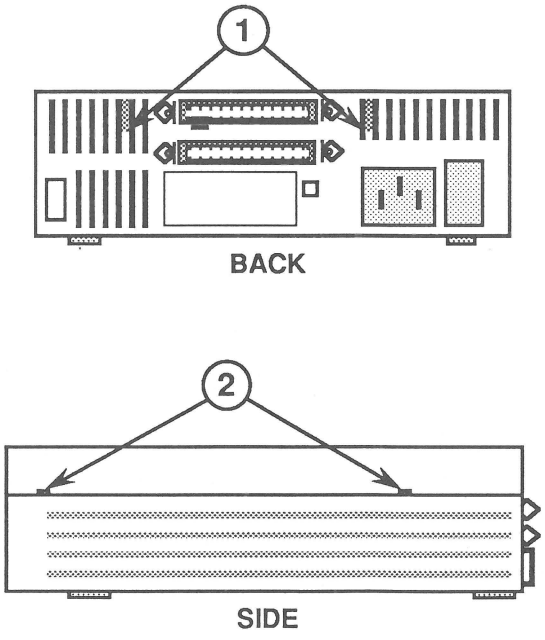

FIGURE 1

Replace

Follow the steps below to replace the case top:

1. Fit the front of the case top under the front lip of the case bottom.

2. Gently push the case top down, making sure the metal shields are tucked in.

   You will hear a click when the tabs are seated.

❑ POWER SUPPLY

Materials Required

#2 jeweler's screwdriver

Remove

Remove the power supply as follows:

1. Remove the case top.

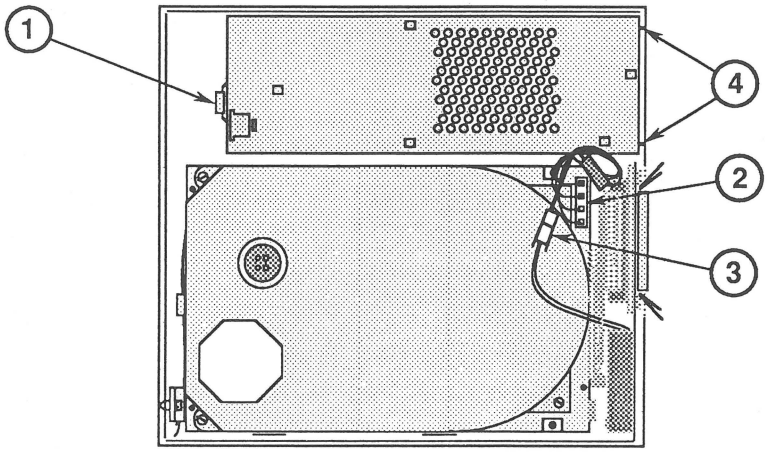

FIGURE 2

2. Push back the power supply tab (Figure 2, #1), lift up the front edge of the power supply, and rest it on the front of the case.

3. Disconnect the power supply connector (Figure 2, #2) from the hard disk assembly.

   Note: On some hard disk assemblies, the power supply connector is located on the opposite side of the hard disk.

4. Disconnect the fan cable by releasing the little holding clip on the connector (Figure 2, #3).

5. Lift the power supply free.

Replace

Replace the power supply as follows:

1. Place the power supply loosely into the drive case with its front edge resting on the front edge of the case.

2. Connect the fan cable (Figure 2, #3). It fits only one way.

3. Connect the power supply connector (Figure 2, #2) to the hard disk assembly. It fits only one way.

   Note: On some hard disk assemblies, the power supply connector is located on the opposite side of the hard disk.

4. Carefully slide the power supply toward the tabs (Figure 2, #4) on the inside back of the case bottom until the tabs fit into the holes in the power supply's metal case.

5. Carefully settle the power supply into place, so that the edge of the metal bracket fits under the tab (Figure 2, #1).

6. Replace the case top.

❑ HARD DISK ASSEMBLY

Use the following procedure to replace any external 3.5-inch or 5.25-inch 20SC, 40SC, 80SC, or 160SC hard disk assembly. If you are replacing a 20 MB drive, keep in mind that Apple currently ships two versions of this drive. To the customer, the Hard Disk 20SC Version A drive and the Hard Disk 20SC Version B drive are identical, but **these drives must be replaced like-for-like.** To differentiate between the drives, refer to "Identifying 20SC Revision A and B Drives."

Materials Required

#2 jeweler's screwdriver
Needlenose pliers

Remove

Remove the hard disk assembly as follows:

1. Remove the case top.

2. Push back the large tab (Figure 3, #1), slide the hard disk up, and rest it on the front edge of the case.

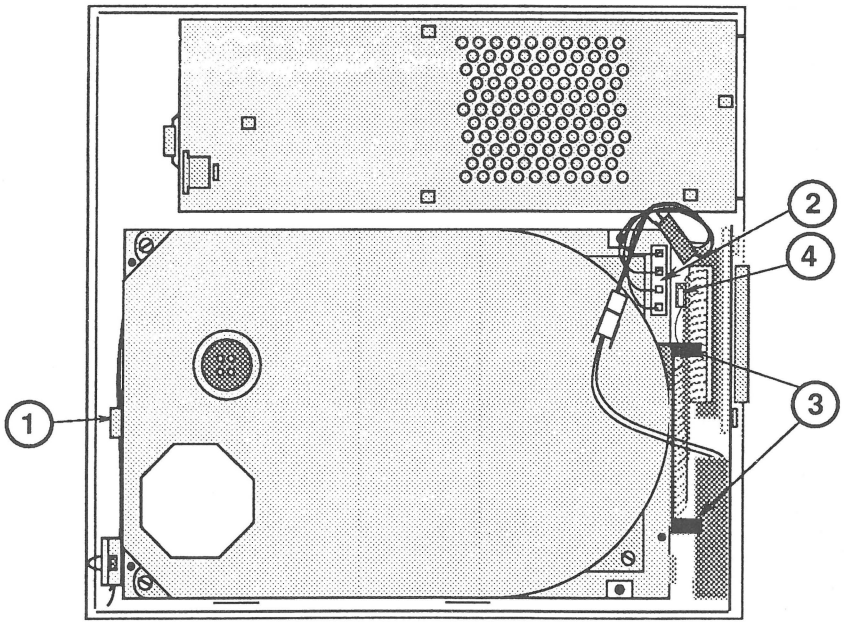

FIGURE 3

3. Disconnect the power supply connector (Figure 3, #2).

   Note: On some hard disk assemblies, the power supply connector is located on the opposite side of the hard disk.

4. Open the end tabs (if present) on the HDA-to-case cable connector (Figure 3, #3), and disconnect the cable from the hard disk assembly.

5. Disconnect the SCSI select switch connector (Figure 3, #4).

6. Lift the hard disk assembly out of the case.

   Note: External 20 MB and 160 MB drives are returned to Apple in their original mounting frames. If you are replacing an external 20 MB or 160 MB drive, skip the following steps for removing the mounting frame and go to the Replace procedure.

   Note: The 3.5-inch hard drives are mounted on four screws near the center of the metal frame.

7. Turn the drive over, and remove four screws (Figure 4, #1) from the bottom edge of the metal mounting frame.

8. Disconnect the LED cable and SCSI select cable from the hard disk assembly, and set the metal mounting frame aside. Use this mounting frame to install the service (replacement) module.

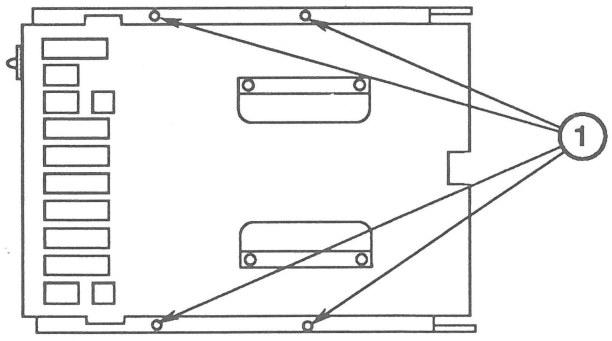

FIGURE 4

Identifying 20SC Revision A and B Drives

Hard Disk 20SC Revision A and Revision B drives must be replaced like-for-like. To differentiate between drive versions, check the location of the circuit boards when the drive is installed in an internal frame. For Revision A drives, the component side of the board is up (Figure 5, #1); for Revision B drives, the solder side is up (Figure 5, #2).

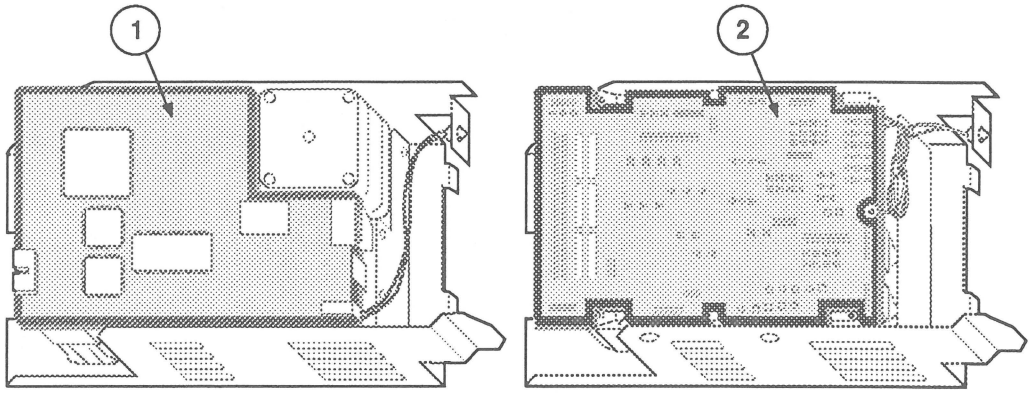

FIGURE 5

Reconfiguring Service Modules

The external 20 MB drive and 160 MB 5.25 drive service modules are shipped in a frame that fits inside the external case. If you are replacing one of these drives, go to the Replace procedure. **If you are replacing any other 5.25-inch or 3.5-inch external drive, you must modify the service module and transfer it to the customer's mounting frame.** Perform the reconfiguration procedure that is appropriate for the size drive you are replacing.

Reconfiguring 5.25-inch Drives

Reconfigure a 5.25-inch drive assembly as follows:

1. Remove the four screws from the internal mounting frame, and remove the drive. Use the internal frame to return the defective drive to Apple.

2. Disconnect the three resistor packs (Figure 6, #1) from the controller board. To do this, use needlenose pliers and pull the resistor packs straight up.

3. Disconnect the power cable (Figure 6, #2).

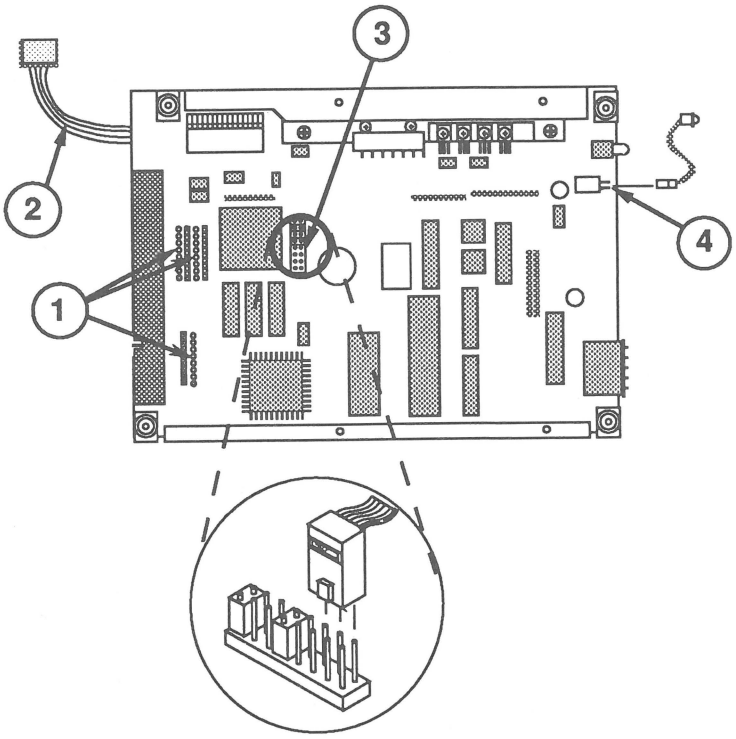

FIGURE 6

IMPORTANT: *The SCSI connector is an* ***unkeyed*** *double row of sixteen pins. Be sure to install the SCSI cable with its tab ("key") pointed toward the large 50-pin SCSI connector at the back of the controller board.*

4. Connect the SCSI select cable (from the customer's mounting frame) to the SCSI select cable connector (Figure 6, #3) on the controller board. Connect the SCSI cable to the three pairs of pins closest to the center of the board (see detail drawing). (Leave the small black jumpers on the other pins.)

5. Position the customer's mounting frame over the bottom (board side) of the hard disk, and connect the LED cable connector to the controller board (Figure 6, #4). Be sure the tab on the cable connector is up and the wires are pointing down.

6. Align the mounting holes in the hard disk to the holes along the outside edges of the mounting frame, and install four screws.

Note: For information about returning a bad drive to Apple, see "Returning Modules to Apple."

Reconfiguring 3.5-inch Drives

Reconfigure a 3.5-inch drive assembly as follows.

Note: The 3.5" 160 MB drive is available only as an internal drive, and it is available only in the Macintosh IIfx and Macintosh IIci.

1. Remove the four screws from the internal mounting frame, and remove the drive assembly. Use the internal frame to return the defective drive to Apple.

2. Disconnect the three resistor packs (Figure 7, #1) from the controller board. To do this, use needlenose pliers and pull the resistor packs straight up.

3. Disconnect the power cable (Figure 7, #2). (On some drive assemblies, the power cable is located on the opposite side of the hard disk.)

4. Identify the graphic (Figure 7 or 8) that shows the SCSI connector configuration (Figure 7, #3 or Figure 8, #1) of your hard disk assembly.

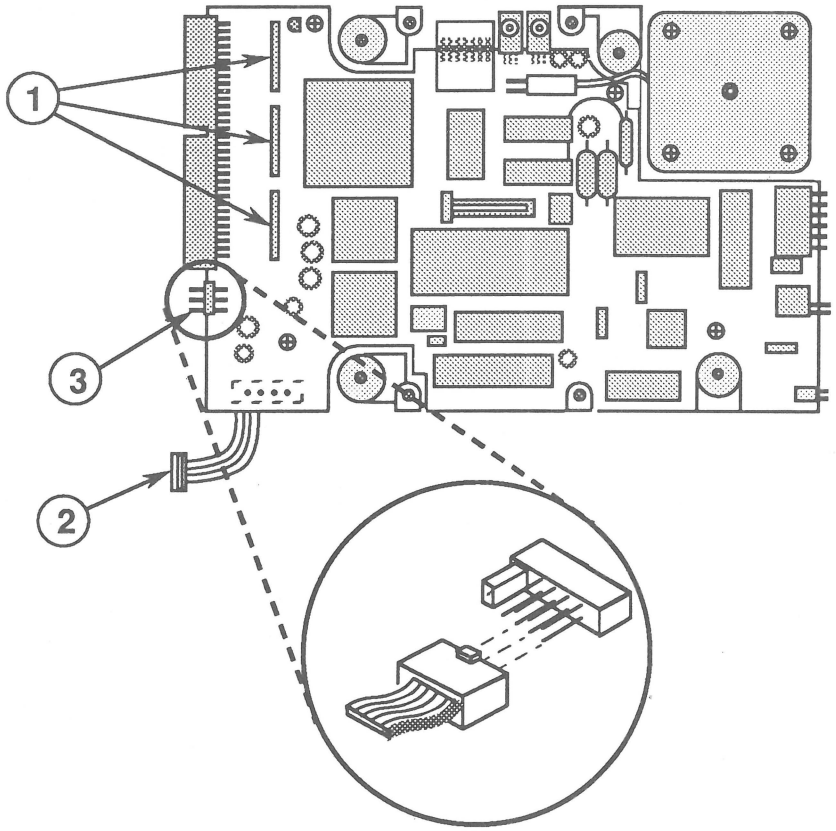

FIGURE 7

IMPORTANT: *You must connect the customer's SCSI select cable to six unkeyed connector pins on the controller board. The SCSI connectors differ in design and location between drive models.* ***For models represented by Figure 7, be sure to install the SCSI cable with its tab ("key") pointing up. For models represented by Figure 8, be sure to install the SCSI cable with its tab pointing toward the outside edge of the controller board.***

5. Connect the customer's SCSI select cable to the SCSI select connector on the controller board. Orient the cable connector as follows:

   - **Figure 7:** Attach the SCSI cable connector (tab up) to the three pairs of pins nearest the outside edge of the board. On some models, one or more of the three outside pairs of pins may have small jumpers installed; if so, remove the jumper(s).

   - **Figure 8:** Attach the cable connector (tab out) to the three **outermost** pairs of pins on the 12-pin connector (the three pairs of pins nearest the large, 50-pin SCSI connector).

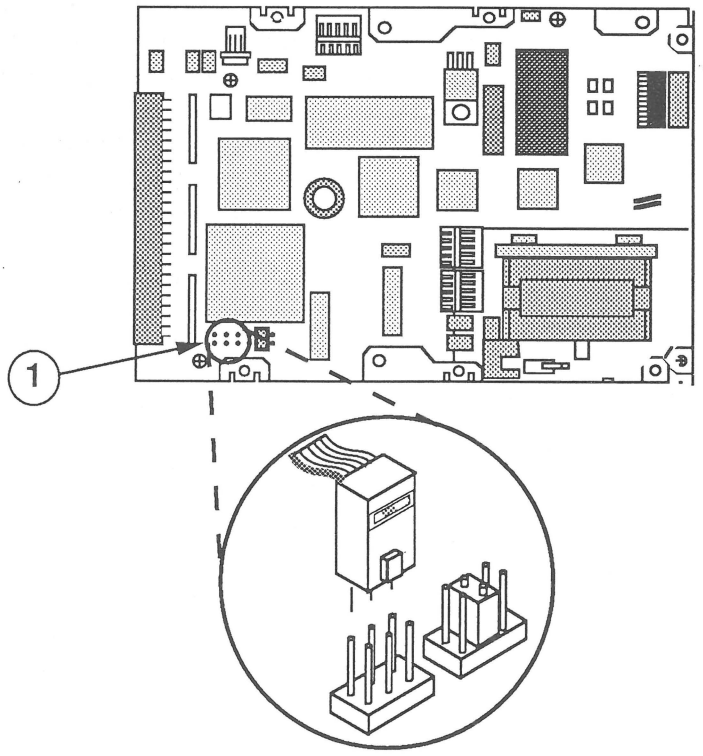

FIGURE 8

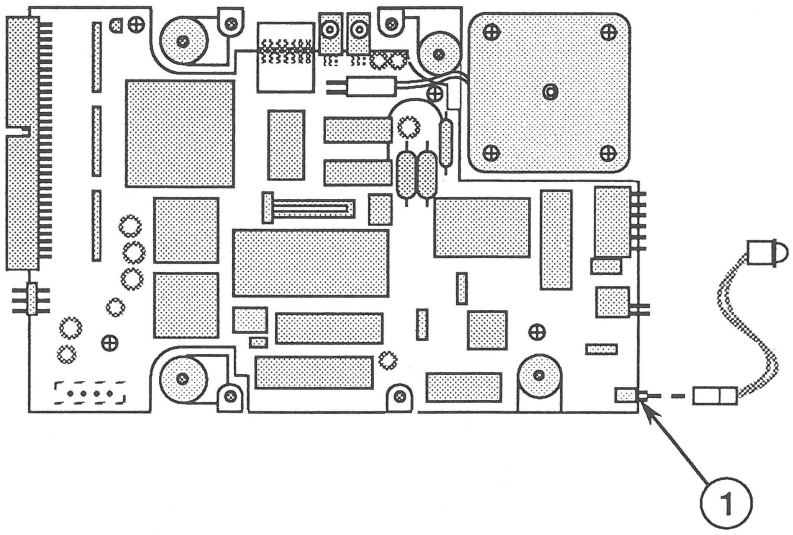

FIGURE 9

6. Position the customer's mounting frame over the bottom (board side) of the hard disk, and connect the LED cable from the customer's frame to the LED connector on the controller board (Figure 9, #1). Be sure the tab on the cable connector is pointing up and the wires are pointing down.

7. Align the mounting holes in the hard disk to the mounting holes nearest the center of the mounting frame, and install four screws.

   Note: Use the internal (service module) frame to return the defective drive to Apple.

Replace

1. Make sure the service module is properly configured for installation in the customer's external drive case. **If you neglect to remove the resistor packs, the drive will not function properly in the customer's system.** Refer to the preceding section, Reconfiguring Service Modules, for more information.

2. Place the hard disk assembly loosely into the case bottom near its final position.

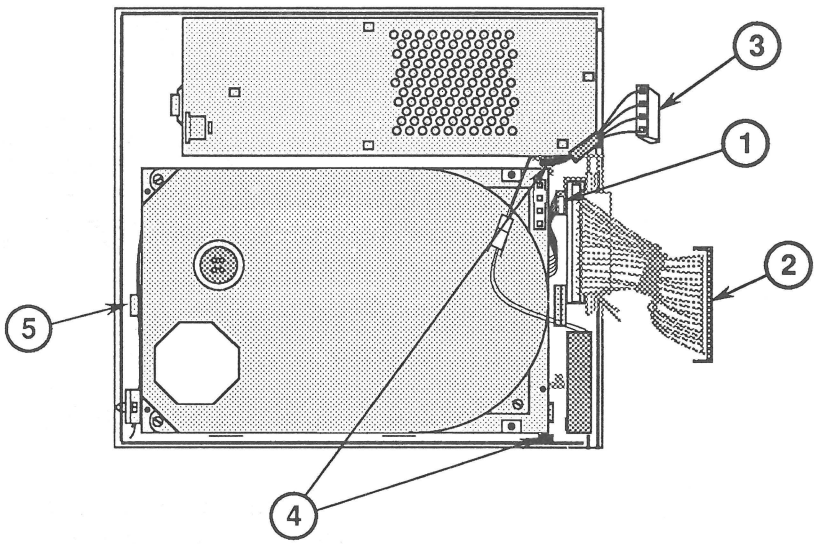

FIGURE 10

3. Connect the SCSI select switch connector (Figure 10, #1).

4. Connect the HDA-to-case cable (Figure 10, #2) to the hard disk assembly, and close the end tabs.

5. Connect the power supply connector (Figure 10, #3).

   Note: On some hard disk assemblies, the power supply connector is located on the opposite side of the hard disk.

6. Slide the hard disk assembly toward the small tabs (Figure 10, #4) on the case bottom until the back edge of the metal frame is in place under the tabs.

7. Push back the holding tab (Figure 10, #5), and carefully settle the hard disk assembly into place.

8. Replace the case top.

❑ SCSI SELECT SWITCH CABLE

Materials Required

Small flat-blade screwdriver
#2 jeweler's screwdriver

Remove

To remove the SCSI select switch cable:

1. Remove the case top.
2. Remove the hard disk assembly.

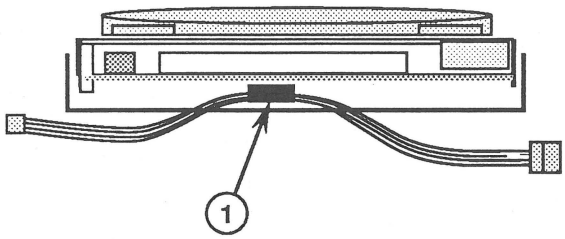

FIGURE 11

3. Slide the cable out of the holding clamp(s) (Figure 11, #1) attached to the mounting frame. (On one type of clamp, you may need to use a small screwdriver to break the adhesive before you can slide the cable out.)

Replace

To replace the SCSI select switch cable:

1. Lift up (or open) one side of the holding clamp(s) (Figure 11, #1) that is attached to the mounting frame, and slide the cable into place. Make sure the cable is routed as shown.
2. Connect the SCSI select switch cable connector to the controller board. For more information about correctly connecting the SCSI select switch, see "Reconfiguring Service Modules."
3. Replace the hard disk assembly.
4. Replace the case top.

❑ LED CABLE ASSEMBLY

Materials Required

#2 jeweler's screwdriver
Small torx screwdriver (for the 160SC only)

Remove

To remove the LED cable assembly:

1. Remove the case top.
2. Remove the hard disk assembly.
3. **If you are repairing a Hard Disk 160SC,** remove four screws (Figure 12, #1) and pull the end bracket with LED cable (Figure 12, #2) off the hard disk assembly. Use the small torx screwdriver.

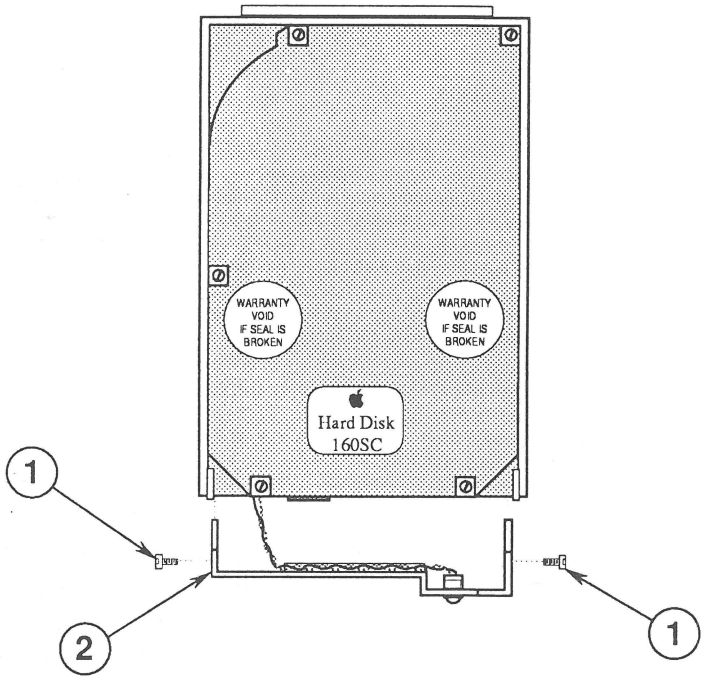

FIGURE 12

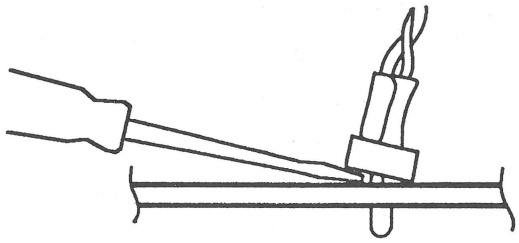

FIGURE 13

4. Pry the small plastic retaining ring from around the LED holder with a jeweler's screwdriver (Figure 13). Slide the retaining ring up the wires and out of the way.

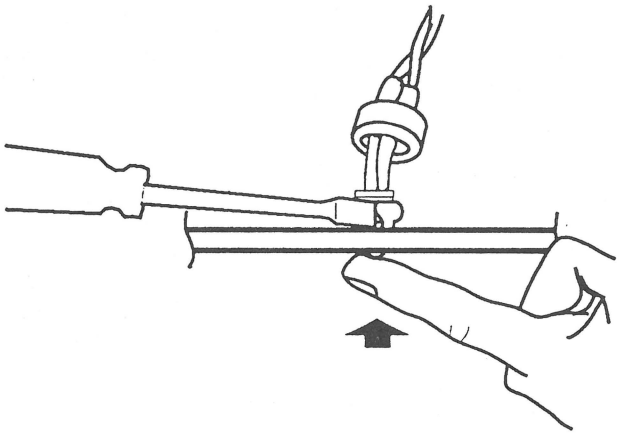

FIGURE 14

5. Press the face of the LED toward the inside of the metal frame while gently prying apart the LED holder with the screwdriver until the LED snaps free of the metal frame (Figure 14).

6. Disconnect the LED connector from the hard drive assembly, and remove the LED cable assembly.

Replace

To replace the LED cable assembly:

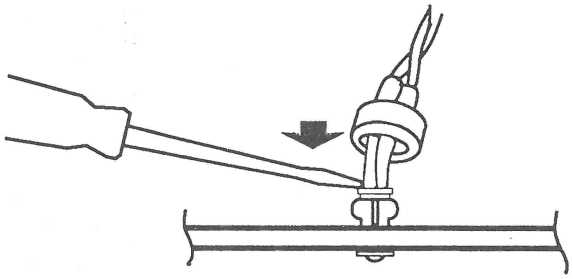

FIGURE 15

1. If necessary, slip the LED into its holder and snap it into place with a jeweler's screwdriver (Figure 15).

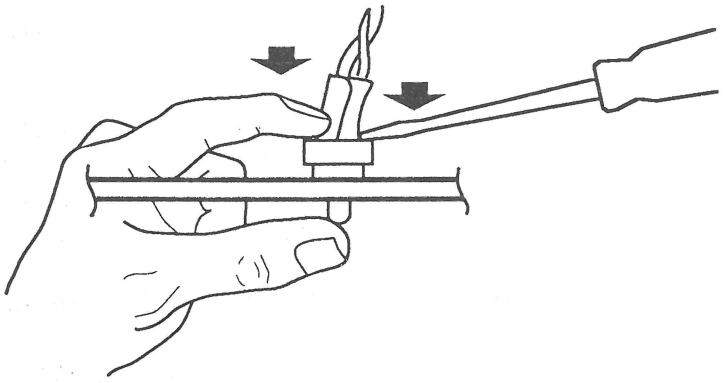

FIGURE 16

2. Slide the retaining ring down the wires and position it around the LED holder. Push the ring back into place with the screwdriver (Figure 16).

3. Connect the LED cable to the LED connector on the controller board.

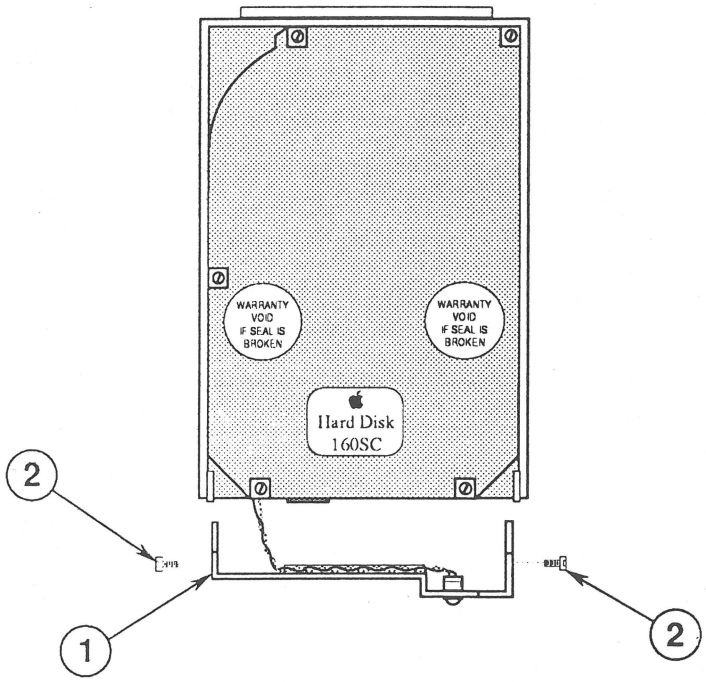

FIGURE 17

4. **For 160SC hard drives,** replace the end bracket (with attached LED cable) (Figure 17, #1) on the hard disk assembly, and install four screws (Figure 17, #2). Use the torx screwdriver.

5. Replace the hard disk assembly.

6. Replace the case top.

❑ FAN FRAME

Materials Required

Medium flat-blade screwdriver
#2 jeweler's screwdriver

Remove

To remove the fan frame:

1. Remove the case top.

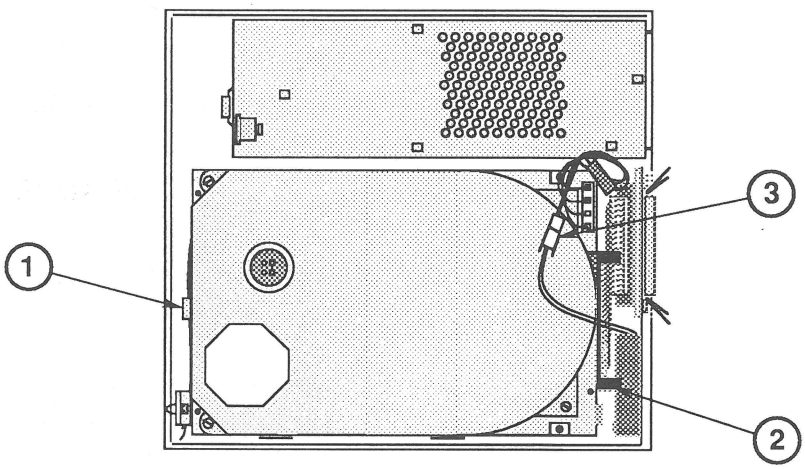

FIGURE 18

2. Push back the large holding tab (Figure 18, #1) and pull up the hard disk assembly (with metal frame). Set the hard disk assembly on the front edge of the case so that you have room to work.

3. Open the end tabs (if present) on the HDA-to-case cable connector (Figure 18, #2) and disconnect the cable from the hard disk.

4. Disconnect the fan cable by releasing the little holding clip on the connector (Figure 18, #3).

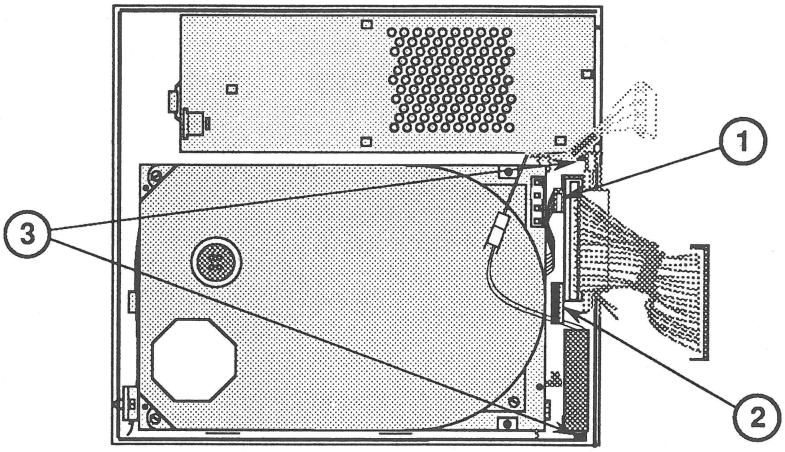

FIGURE 19

5. Disconnect the SCSI select switch cable connector (Figure 19, #1) from the SCSI select switch.

6. Using a flat-blade screwdriver, push back the plastic tab (Figure 19, #2) and lift out the metal fan frame (with fan, HDA-to-case cable, fan cable, and SCSI select switch attached).

Replace

To replace the fan frame:

1. Slide the side edges of the metal fan frame (with fan, HDA-to-case cable, fan cable, and SCSI select switch attached) into the **center** slots of the holding tabs (Figure 19, #3) located on the inside of the case bottom.

2. Push back the plastic tab (Figure 19, #2), and push the fan frame into place.

3. Connect the SCSI select switch cable (Figure 19, #1).

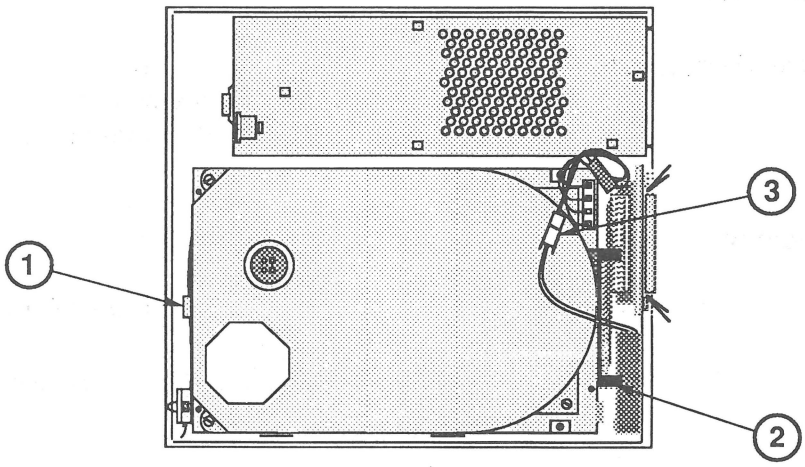

FIGURE 20

4. Connect the fan cable (Figure 20, #3). It fits only one way.

5. Connect the HDA-to-case cable (Figure 20, #2) to the hard disk and close the end tabs, if present.

6. Slide the hard disk assembly back into position, push back the holding tab (Figure 20, #1), and carefully settle the hard disk into place.

7. Replace the case top.

❑ FAN

Materials Required

#2 Phillips screwdriver
#2 jeweler's screwdriver
Medium flat-blade screwdriver

Remove

To remove the fan:

1. Remove the case top and fan frame.

2. Remove the HDA-to-case cable.

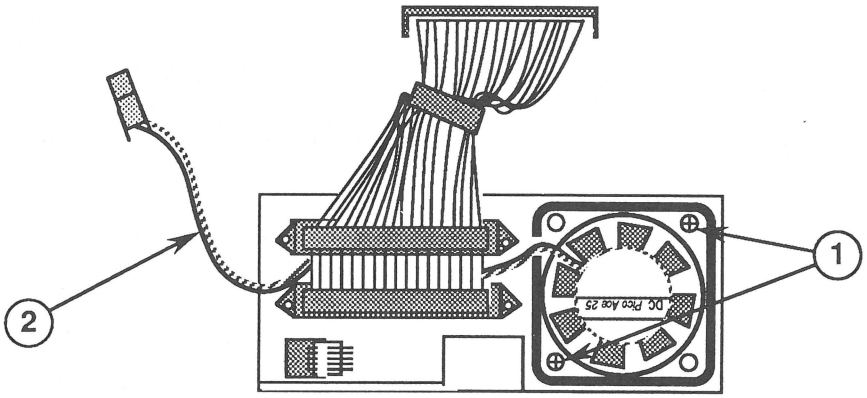

FIGURE 21

3. Remove the two screws (Figure 21, #1) that secure the fan to the frame, and lift the fan free.

Replace

To replace the fan:

1. Set the fan in position in the frame as shown in Figure 21.

2. Replace the two screws (Figure 21, #1) that secure the fan to the frame.

3. Replace the HDA-to-case cable. Be sure to route the fan cable (Figure 21, #2) behind the HDA-to-case cable and between the connectors.

4. Replace the fan frame and case top.

❑ HDA-TO-CASE CABLE

Materials Required

#2 Phillips screwdriver
#2 jeweler's screwdriver
Medium flat-blade screwdriver

Remove

To remove the HDA-to-case cable:

1. Remove the case top.
2. Remove the fan frame.

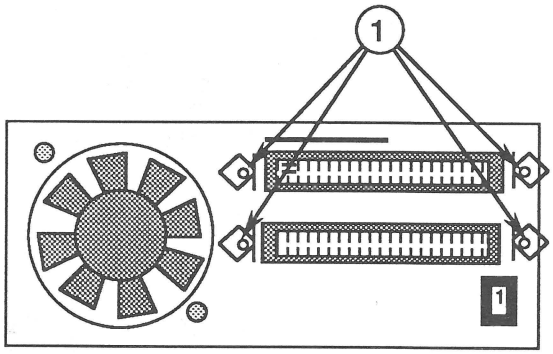

FIGURE 22

3. Remove the four screws (Figure 22, #1) that secure the HDA-to-case cable to the frame, and lift the cable free.

Replace

To replace the HDA-to-case cable:

1. Lace the fan cable between the HDA-to-case cable and the two cable connectors. See Figure 22.
2. Set the cable connectors in place in the appropriate openings in the metal frame.
3. Replace the four screws (Figure 22, #1) that secure the HDA-to-case cable to the metal frame.
4. Replace the fan frame.
5. Replace the case top.

❑ SCSI SELECT SWITCH

Materials Required

#2 Phillips screwdriver
#2 jeweler's screwdriver
Medium flat-blade screwdriver

Remove

To remove the SCSI select switch:

1. Remove the case top.

2. Remove the fan frame.

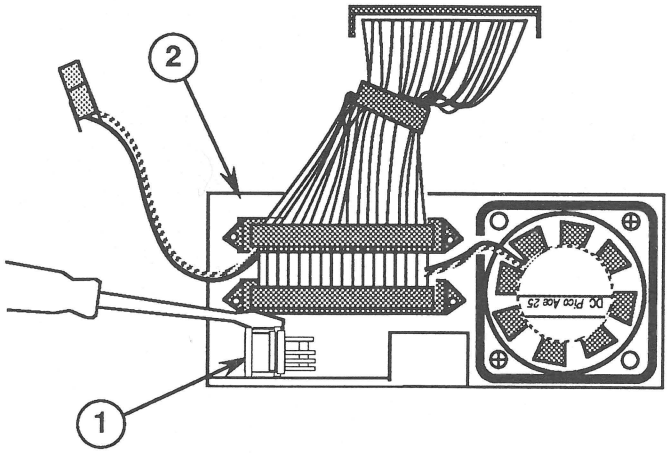

FIGURE 23

3. Remove the switch (Figure 23, #1) by pushing it through the fan frame (Figure 23, #2) from the inside to the outside. To do this, push down on the switch and simultaneously depress the two plastic tabs—first on one side of the switch and then on the other. Use a jeweler's screwdriver to depress both tabs at the same time.

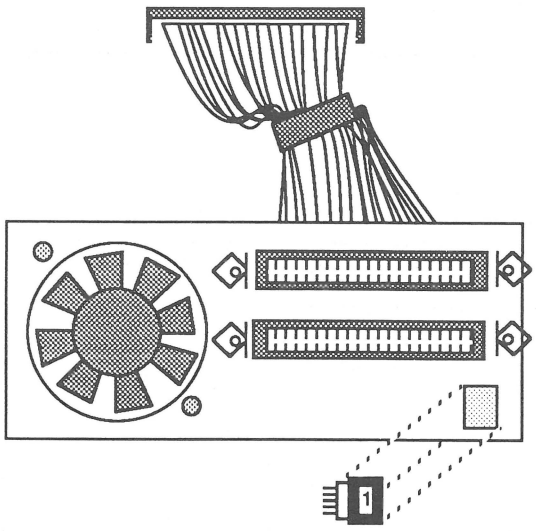

FIGURE 24

Replace

To replace the SCSI select switch:

1. Replace the switch on the fan frame. To do this, first insert the switch from outside to inside through the opening in the metal frame. Make sure the switch connector is aligned as shown in Figure 24. Then push up on the switch until it snaps securely into place on the frame.

2. Replace the fan frame.

3. Replace the case top.

Apple Technical Procedures

SCSI Hard Disk Drives

Section 3 – Diagnostics

❑ CONTENTS

3.2 Test Versions
3.2 Tests Run on the Macintosh
3.2 Tests Run on the Apple II
3.3 Macintosh Hard Disk Drive Diagnostic
3.3 Introduction
3.3 Materials Required
3.3 Running the Test
3.8 Using the Test Selections Subwindow
3.10 Using the Pull-Down Menus
3.12 Apple II SCSI Diagnostic
3.12 General Information
3.13 Things to Remember
3.14 Materials Required
3.14 Making Selections
3.15 Using the Test Selections Menu
3.16 Using the SCSI Drive's Main Menu
3.19 Running the Diagnostic

❑ TEST VERSIONS

All Apple internal and external SCSI hard disk drives and the non-SCSI Hard Disk 20 drive can be tested from Macintosh-family computers or from Apple IIe or IIGS computers. Use the test programs and equipment described below.

Tests Run on the Macintosh

Apple SCSI hard disk drives can be tested from any Macintosh test station using the *Macintosh Hard Disk Test* program contained on the *Macintosh Hard Disk Test* diagnostic disk. This test program can also be used to test a non-SCSI Hard Disk 20 drive from a Macintosh 512K, 512K enhanced, Plus, SE, or Portable test station.

The *Macintosh Hard Disk Test* program is a pass/fail functional test of the disk drive. The program performs the following tests:

- Bad Block Scan Test
- Random Seek Test
- Exterior Track Seek Test
- Interior Track Seek Test
- Write Test
- Verify Partition Map test
- Termination Power Test

Refer to "Macintosh Hard Disk Drive Diagnostic" for instructions for using the *Macintosh Hard Disk Test* program.

Tests Run on the Apple II

To test a SCSI hard disk drive from either an Apple IIe or Apple IIGS, use the *Apple II Hard Disk Test* and *Apple II SCSI Card Test* programs on the *Apple II SCSI Diagnostic* disk. Both programs are pass/fail functional tests.

The *Apple II Hard Disk Test* program includes the following tests: bad block scan, random seek, exterior and interior track seek, and write test.

Refer to "Apple II SCSI Diagnostic" later in this section for instructions for using the Apple II diagnostic programs.

❑ MACINTOSH HARD DISK DRIVE DIAGNOSTIC

Introduction

The *Macintosh Hard Disk Test* diagnostic disk is used to test all Macintosh internal and external SCSI drives. The *Macintosh Hard Disk Test* program on this disk is also used to test the non-SCSI Hard Disk 20 drive. (All references in the following procedure are to SCSI drives, but the procedure for testing the non-SCSI Hard Disk 20 drive is the same.)

Note: Only Macintosh 512K, 512K enhanced, Plus, SE, and Portable systems can be used to test the non-SCSI Hard Disk 20 drive.

Materials Required

Known-good Macintosh (test station)
Known-good *Macintosh Hard Disk Test* diagnostic disk (Version 2.1 or higher)
Macintosh external or internal SCSI drive, or Hard Disk 20 disk drive (to be tested)

Running the Test

Note: Perform steps 1-3 only if you are testing an external SCSI drive; if you are testing an internal SCSI drive, go to step 4.

1. Connect the external SCSI drive being tested to the SCSI port on the rear of the Macintosh test station. (Do not install a SCSI loopback card. The SCSI loopback card inhibits the normal operation of the SCSI bus.)

2. Write down the SCSI select number of the external SCSI drive being tested. Make sure the SCSI select switch of the external drive is set at a number between 0 and 6.

   Note: The SCSI select number of Macintosh SE family and Macintosh II family **internal** hard disk drives is preset at 0. When using one of these systems to test an external SCSI drive, designate a SCSI select number between 1 and 6 for the external drive.

3. Switch on the external SCSI drive.

4. Insert the *Macintosh Hard Disk Test* diagnostic disk in the internal drive, turn on the Macintosh test station, and double-click on the disk icon.

5. Double-click on the *Macintosh Hard Disk Test* icon. A window that includes a Test Selections subwindow on the left and a Drive Configuration subwindow on the right appears (Figure 1).

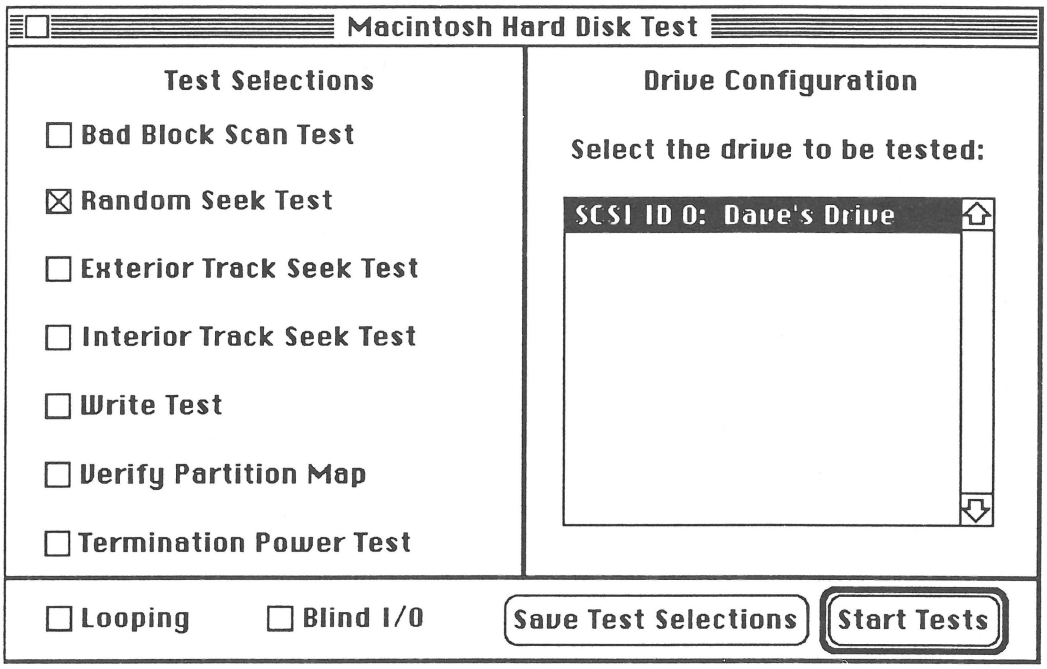

FIGURE 1

Note: You can select one or more of the tests shown in the Test Selections subwindow by clicking on the box in front of the desired test. Clicking again on the box deselects the test. Selected tests run in the order shown. (Selecting the Termination Power Test disables the selection of any other test.)

6. Using the Test Selections subwindow, select the drive test(s) that you want to run. The test selections include the following:

   - Bad Block Scan Test
   - Random Seek Test
   - Exterior Track Seek Test
   - Interior Track Seek Test
   - Write Test
   - Verify Partition Map test
   - Termination Power Test

   Refer to "Using the Test Selections Subwindow" for more information about these tests. (Descriptions of the tests are also available on-line by choosing **Test Information Part 1** and **Part 2** from the Help menu.)

IMPORTANT: *The Bad Block Scan Test is the only test that reads every block on the drive being tested. At the very minimum, run this test on each drive being tested.*

CAUTION: *The Write Test could erase data from the SCSI drive being tested.* ***Do not perform the Write Test unless your customer has backed up all important data.***

7. Check that the SCSI drive you want to test appears in the scrollable Drive Configuration subwindow, and that its SCSI ID number is correct. If not, recheck the cable connections. If the cable connections are good but the problem persists, replace the bad SCSI drive.

8. Select the SCSI drive you want to test. To do this, click on the desired SCSI drive (to highlight it). Only one hard drive can be tested at a time.

9. If you are trying to detect an intermittent failure in the drive being tested, select **Looping**. When in the looping test mode, **all selected tests will continue until you click the Stop button.**

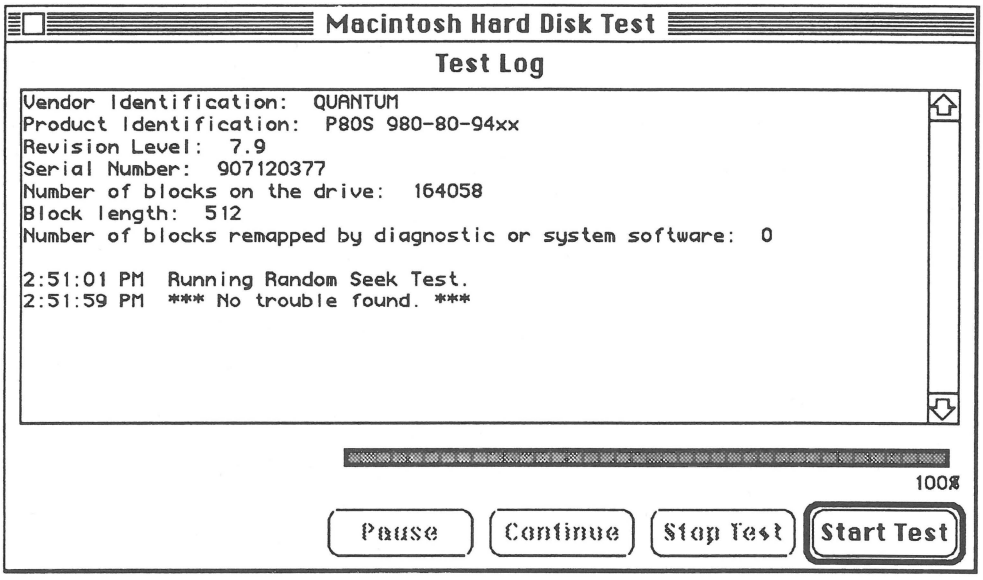

FIGURE 2

10. When you are ready to start the diagnostic, click **Start Tests**. The diagnostic runs the selected tests and displays the Test Log (Figure 2). The Test Log does the following:

    - Provides information about the drive being tested. When testing a SCSI drive, the Test Log displays the type of information shown in Figure 2.
    - Tells you what tests are being run, when each test began, and when the selected tests were completed.
    - Tracks test progress on a bar graph in the lower right corner of the window.
    - Informs you of any change in test status.
    - Tells you the test results and recommends the appropriate repair action (if necessary).

    Note: If the SCSI drive does not pass, the diagnostic displays an error message describing the failure. This information is provided for your benefit, and for the benefit of your customer (if you choose). To resolve any problem, you still must replace the bad drive.

11. You can halt testing at any time by clicking **Pause** or **Stop Test**. If you click the Pause button, the test pauses until you click **Continue**, and then the test resumes at the point where it was halted. If you click the Stop Test button, the test stops entirely. You can click **Start Test** to restart the selected test(s).

12. At the conclusion of the test, you have the following options from the Test Log window:

    a) Rerun the selected tests. Press **Start Test**.

    b) Quit the diagnostic. Choose **Quit** from the File menu (or type ⌘**Q**).

    c) Select another SCSI drive. Choose **Test Selections** from the Windows menu (or type ⌘**T**), and highlight in the Drive Configuration subwindow the drive you want to test next.

    d) Reconfigure the test selections. Choose **Test Selections** from the Windows menu (or type ⌘**T**), and select the test(s) you want to run next.

    e) Save selected tests for the next time you test Macintosh SCSI drives. Choose **Test Selections** from the Windows menu (or type ⌘**T**), and click **Save Test Selections**. This option is available only after you have run a test.

    f) Personalize, save, or print the Test Log. Choose **Personalize Log...**, **Save Log...** (or type ⌘**S**), or **Print Log...** (or type ⌘**P**) from the File menu. Refer to "Using the Pull-Down Menus" for more information about these options.

Using the Test Selections Subwindow

When selecting which tests to run on a customer's hard disk drive, keep in mind the following guidelines. (These guidelines are also available on-line by choosing **Test Selection Guidelines** from the Help menu.)

- At a very minimum, you should always run **Bad Block Scan Test** on each drive being tested. This is the only test that reads every block on the drive. For more thorough testing, also run **Random Seek Test**, **Exterior Track Seek Test**, and **Interior Track Seek Test**.

- If you need to save time, run just **Random Seek Test**. This test reads a percentage of blocks on the disk in a random order, thereby verifying that the drive's seek mechanism is functioning properly. Selecting **Blind I/O** will also save time if you are running the Termination Power Test.

- Running **Write Test** could destroy data. Run **Write Test** only if you suspect that the customer's drive has a bad write mechanism, and only if the customer has backed up any data on the drive.

The following tests are available on the *Hard Disk Test* diagnostic:

- **Bad Block Scan Test** – This test reads every block on the disk to detect bad blocks, and attempts to remap (replace) any bad blocks that it encounters. (If you continue to have difficulty with the drive after remapping its bad blocks, you will have to reformat the drive.) The test takes up to 20 minutes, depending upon the storage capacity of the SCSI drive being tested.

- **Random Seek Test** – This test checks the drive's ability to seek random blocks on the disk. The test checks the drive's seek mechanism and takes up to two minutes to run.

- **Exterior Track Seek Test** – This test also checks the drive's seek mechanism. The test seeks the drive's exterior track from locations progressively nearer the center of the disk. The test takes two minutes to run.

- **Interior Track Seek Test** – This test seeks the drive's interior track from locations progressively nearer the outside of the disk. The test takes two minutes to run.

- **Write Test** – This test checks the drive's write mechanism, and takes 10 minutes to run. The test reads a randomly selected percentage of blocks on the disk, scrambles their patterns, and writes them back. It then rereads the blocks and checks that the scrambled patterns—before and after being written to disk—match.

  Note: **If the drive is functioning properly,** the Write Test will not destroy the customer's data. The Write Test preserves the customer's data by removing the data before testing each block and replacing the data after testing. **However, if the customer's drive is faulty, the Write Test could destroy data.**

- **Verify Partition Map** – This test checks the validity of the drive's partition map. If the partition map is damaged, the drive must be reformatted and repartitioned using HD SC Setup.

- **Termination Power Test** – This test checks the drive's ability to reliably read and transfer data from a SCSI hard disk. If a drive passes other tests but intermittently fails the Termination Power Test, improper SCSI bus termination is the likely cause.

- **Looping** – This test mode is especially useful for detecting intermittent failures. **When operating in the Looping mode, the diagnostic continues running all selected tests until you click the Stop button.**

- **Blind I/O** – Selecting this option may speed up test time, but the ammount of time saved varies between drives. The Blind I/O test mode significantly reduces the test time of the Termination Power Test on all drives.

Using the Pull-Down Menus

The *Hard Disk Test* diagnostic includes the following pull-down menus: ((Apple) menu, File menu, Edit menu, Windows menu, and Help menu.

Of these menus, the Edit menu is dimmed, and the ((Apple) menu contains standard Chooser and Control Panel options, as well as About the Diagnostic. The other three menus contain options that you will find helpful when using the *Hard Disk Test* diagnostic.

File Menu Options

The File menu includes the following options:

- Close (⌘W)
- Personalize Log...
- Save Log... (⌘S)
- Page Setup...
- Print Log... (⌘P)
- Exit to HD Setup
- Quit (⌘Q)

The Personalize, Save, and Print Log options enable you to make better use of the new Test Log window. After testing a customer's SCSI disk drive, you can now personalize and print a record of the test session and give this record to the customer. You can also save the test log to disk for your own records.

Note: **Test Log** is saved to disk as a text file that can be opened from most word processing programs.

To personalize a copy of the Test Log for your customer, choose **Personalize Log...** from the File menu. The window shown in Figure 3 appears. This log can be used in many ways, but in this example you would type the customer's name and address on the lines shown, and type the serial number of the drive being tested on the extra line. This information, along with the test results, prints out when you choose **Print Log...** from the File menu.

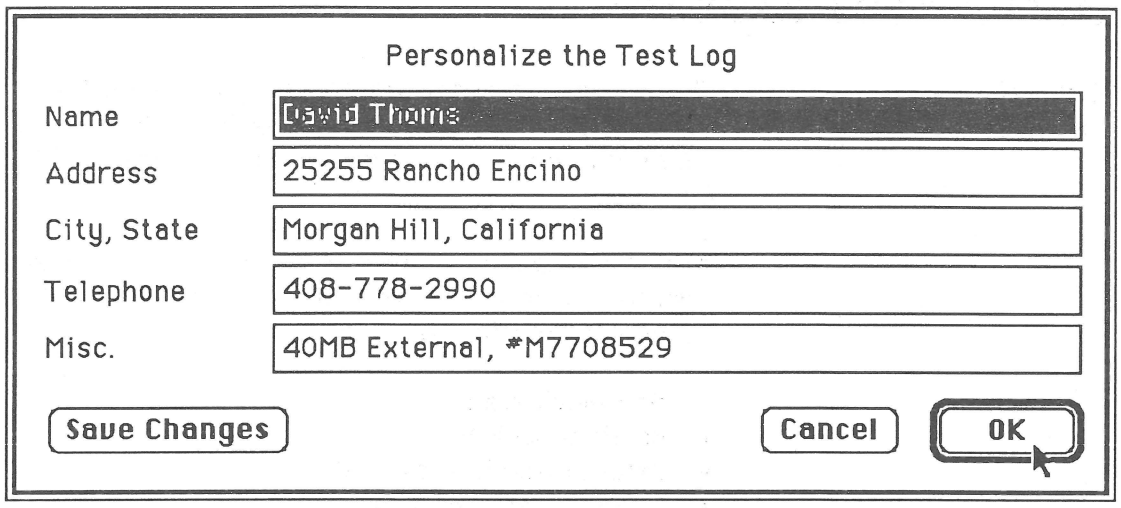

FIGURE 3

Windows Menu Options

Use the Windows menu to move between **Test Selections** (or type ⌘**T**) and **Test Log** (or type ⌘**L**).

Help Menu Options

The Help menu contains useful information that you can access at any time, even during a test (choosing **Help** during a test is the same as clicking the Pause button). The following windows are available:

- **Blind I/O** – Explains this option. Like Looping, Blind I/O can be used with any selected test(s). (This option is not available on a Macintosh Plus test station.)

- **Error Messages** – Explains the use of error messages. These messages provide more-detailed information about the problem encountered with the customer's SCSI drive. This information is provided primarily for use by Apple, but can be made available to your customer if you choose.

- **Test Information Part 1** and **Part 2** – Describe the seven tests available on the *Macintosh Hard Disk Test* diagnostic program (see "Using the Test Selection Subwindow").

- **Test Selection Guidelines** – Advises you when to run specific tests (see "Using the Test Selection Subwindow").

❑ APPLE II SCSI DIAGNOSTIC

General Information

This section describes procedures for testing the Apple SCSI hard disk drives using the *Apple II SCSI Diagnostic* disk, which runs only on the Apple IIGS or Apple IIe.

With this diagnostic, you can choose which tests you wish to run on the customer's drive. You can run one or more of the following tests:

- Bad block scan
- Random seek test
- Exterior track seek test
- Interior track seek test
- Write test

You can also run a continuous (looping) test and keep a record of any error codes that occur. Such a record can be especially valuable when you are attempting to pinpoint the cause of intermittent failures.

If all of the drive tests are selected, the diagnostic will take 40 to 45 minutes (or longer, if the drive is damaged) to test a SCSI drive.

Things to Remember

Read the items below **before** testing a suspected bad drive.

- **Find out if the customer has backed up the files.** If not, you may try retrieving the data with the *System Utilities* disk. If this attempt fails, notify the customer that the data cannot be saved.

- **Make a backup diagnostic disk before beginning!** When testing a defective SCSI Interface Card or hard disk, it is possible to erase or damage a section of the diagnostic disk. (The *System Utilities* disk is used for making a backup copy. Follow the instructions provided with the *System Utilities* disk. Be sure to give your copy disk **exactly** the same name as the original diagnostic disk. If you change the name, you will get a ProDOS error when you try to start the diagnostic.)

- **Always run the Apple II SCSI Card Test diagnostic on the SCSI Interface Card first!** To do this, the SCSI card must be in slot 2. The *Apple II SCSI Card Test* is included with the *Apple II SCSI Diagnostic* disk, version 1.0. (For more information, refer to the *Apple II Family Cards* Technical Procedures.)

CAUTION: *A damaged SCSI hard disk could damage the SCSI Interface Card. After using the Apple II Hard Disk Tests to repair a defective drive, be sure to retest the SCSI Interface Card before testing another drive.*

- This diagnostic looks for hardware errors (which are repaired by module exchange) and software errors (which can usually be corrected by the diagnostic). **When the diagnostic locates a software error, it will repair it. Tell the customer that this process may cause some data to be unreadable.**

- When the hard disk is switched on, the drive whirs. After 5 to 20 seconds, a barely audible signal noise indicates the drive is ready.

Materials Required

Apple II SCSI Diagnostic disk, version 1.0
SCSI Interface Card
Hard disk to be tested
Apple IIGS with known-good Apple 5.25 Drive or UniDisk **or** Apple IIe with known-good UniDisk and Extended 80-Column Card
UniDisk Controller Card (if using UniDisk)

Making Selections

As you read the menu descriptions in the next section, keep in mind the following general rules for making menu selections:

- To make a selection, type the letter of the menu item you wish, or use the arrow keys to highlight the desired option and press <Return>. Selected menu options are indicated by an asterisk preceding the entry.
- To deselect a menu item, repeat either of the steps used to select it (selections can be toggled on or off).
- To access the Help screen, hold down the <Command> key and type ?.

Using the Test Selections Menu

After starting up the *Apple II SCSI Diagnostic* disk, the Test Selections Menu shown below (Figure 4) appears.

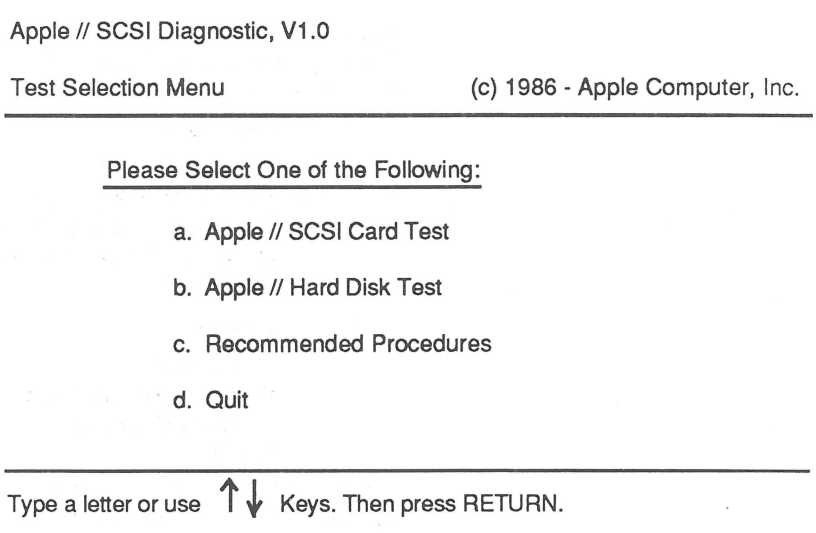

FIGURE 4

- **Apple II SCSI Card Test**—Brings up the test menu for the SCSI Interface Card. The SCSI Interface Card should be tested before you test the drive. In order to do this test, the SCSI card must be installed in slot 2. (Refer to the *Apple II Family Cards* Technical Procedures.)

- **Apple II Hard Disk Test**—Brings up the main menu for testing the hard disk drives. **Select this option when you are ready to test the customer's SCSI hard drive.**

- **Recommended Procedures**—Lists the sequence in which the diagnostics should be performed.

- **Quit**—Displays a message to reboot the system.

Using the SCSI Drive's Main Menu

After selecting **Apple II Hard Disk Test**, the main menu shown below (Figure 5) appears:

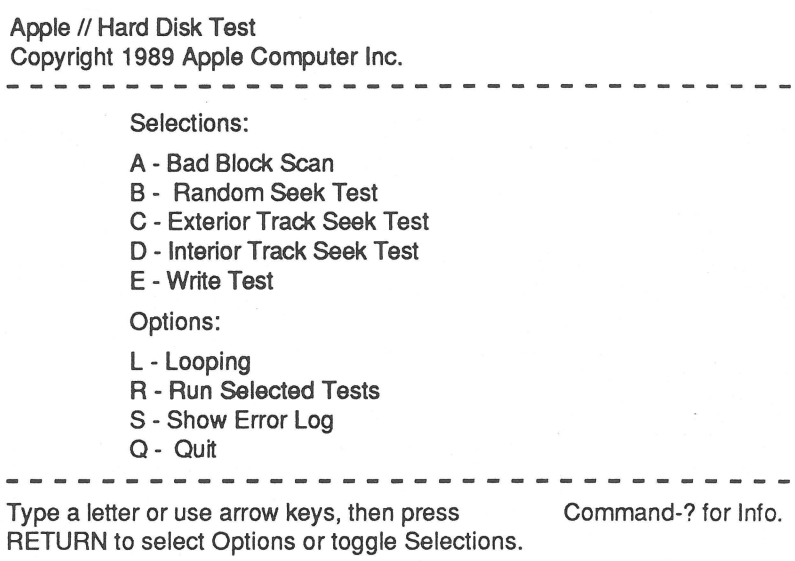

FIGURE 5

The main menu for testing the SCSI drives is divided into two sections, labeled "Selections" and "Options." Explanations of these selections and options, as well as test selection guidelines, follow.

Test Selection Guidelines

You must choose which test or tests you wish to run **before** selecting option "A"—Run Selected Tests. The selected tests will then run in the order shown on the main menu.

Keep in mind the following guidelines when selecting which tests to run on a customer's drive:

- At a very minimum, you should always run the **Bad Block Scan** on each drive being tested. This is the only test that reads every block on the drive. For more thorough testing, also run **Random Seek Test**, **Exterior Track Seek Test**, and **Interior Track Seek Test**.

- If you need to save time, run just **Random Seek Test**. This two-minute test reads a percentage of blocks on the disk in a random order, thereby verifying that the drive's seek mechanism is functioning properly.

- Running **Write Test** could destroy data. Run **Write Test** only if you suspect that the customer's drive has a bad write mechanism, and only if the customer has backed up any data on the drive.

Test Selections

The following SCSI drive tests are available on the *Apple II Hard Disk Test* diagnostic:

- **Bad Block Scan**—This test reads every block on the disk to detect bad blocks, and attempts to remap (replace) any bad blocks that it encounters. The test takes up to 20 minutes. (If you continue to have difficulty with the drive after remapping its bad blocks, you will have to reformat the drive.)

  Note: Remapping bad blocks may cause some data to be unreadable. **Before** running the Bad Block Scan, be sure to inform the customer that data could be lost and find out if the customer has backed up all important files on the drive.

- **Random Seek Test**—This test checks the drive's ability to seek random blocks on the disk. The test checks the drive's seek mechanism, and takes up to two minutes to run.

- **Exterior Track Seek Test**—This test also checks the drive's seek mechanism. The test seeks the drive's exterior track from locations progressively nearer the center of the disk. The test takes two minutes to run.

- **Interior Track Seek Test**—This test seeks the drive's interior track from locations progressively nearer the outside of the disk. The test takes two minutes to run.

- **Write Test**—This test checks the drive's write mechanism. The test reads a randomly selected percentage of blocks on the disk, scrambles their patterns, and writes them back. It then rereads the blocks and checks that the scrambled patterns—before and after being written to disk—match. The test takes 10 minutes to run.

  Note: **If the drive is functioning properly,** the Write Test will not destroy the customer's data. The test prevents data destruction by removing the customer's data before testing each block, and replacing the data after testing. **However, if the customer's drive is faulty, the Write Test could destroy data.**

Test Options

The following SCSI drive test options are also available on the *Apple II Hard Disk Test* diagnostic:

- **Looping**—This test is especially useful for detecting intermittent failures. **The test will continue until you press Escape or the test fails.**

- **Show Error Log**—This option logs any errors found with the drive being tested. The log accounts for the most recently run test(s) only. Used in conjunction with loop testing, this log will help you identify intermittent drive problems.

- **Quit**—Returns you to the *Apple II SCSI Diagnostic* Test Selection Menu.

Running the Diagnostic

Use the following procedure to test a SCSI hard drive with an Apple IIe or Apple IIGS system.

1. Install the SCSI Interface Card in the Apple IIe or Apple IIGS, and connect the SCSI hard disk drive or drives to be tested. (If you intend to test the SCSI Interface Card, be sure to install it in slot 2.)

2. **For the Apple IIGS only,** turn on the system and enter the Control Panel. Make sure that the SCSI drive port slot designation (slot 2) says **Your Card**.

   Note: To enter the Control Panel, press <Option> while you switch on the system, or press <Command> <Control> <Escape>. Then type 1.

3. Insert the *Apple II SCSI Diagnostic* disk into the appropriate 5.25-inch or 3.5-inch disk drive, and switch on (or reboot) the system. The Test Selection Menu will appear. Also switch on the SCSI drive or drives to be tested.

4. From the Test Selection Menu, type a **(Apple II SCSI Card Test)** and test the SCSI card before continuing. (Refer to the *Apple II Family Cards* Technical Procedures.)

5. After completing the Apple II SCSI Card Test, type b **(Apple II Hard Disk Test)** in order to go to the main menu for testing SCSI drives.

6. From the main menu, under **Selections**, select the test(s) that you want to run. You may run any combination of the following tests:

   B - Bad block scan
   C - Random seek test
   D - Exterior track seek test
   E - Interior track seek test
   F - Write test

   Refer to "Using the SCSI Drives Main Window" for more information about these tests. (Descriptions of the tests are also available on-line by typing <Command> <?>.)

   CAUTION: The Write Test could erase data from the SCSI drive being tested. **Do not perform the Write Test unless your customer has backed up all important data.**

7. Also from the main menu, under **Options**, select L **(Looping)** if you want to test for intermittent failures.

   When looping is selected, test(s) run continuously until an error occurs or until you press <Escape>. If you press <Escape>, testing stops and looping is cancelled. You can check for errors after you stop by selecting S **(Show Error Log)**.

8. Again from the main menu, under **Selections**, select A **(Run Selected Tests)** when you are ready to begin the testing sequence. The Drive Selection Menu shown in Figure 6 will appear.

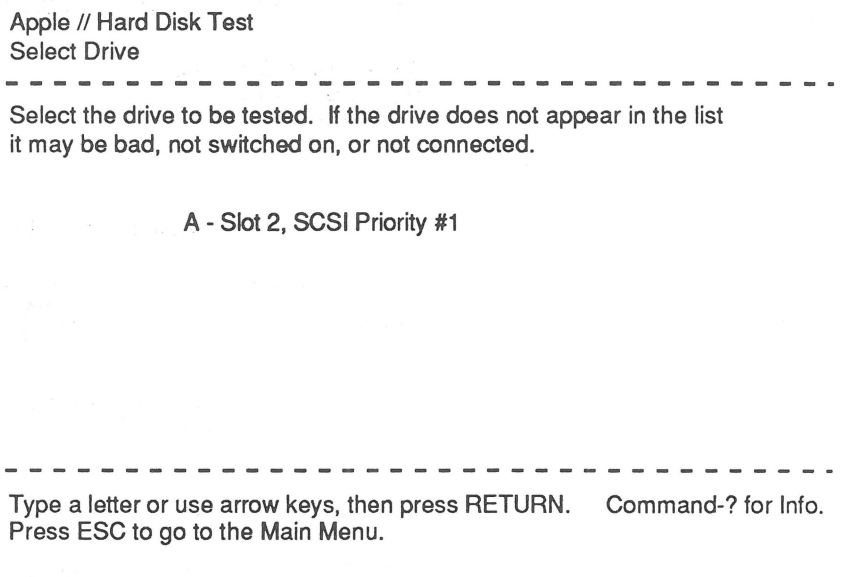

FIGURE 6

9. From the Drive Selection Menu (Figure 6), select the drive you want to test and press <Return> to begin testing.

   If the drive that you want to test does not appear on the Drive Selection Menu, either the drive is bad, not switched on, or not connected—or the Control Panel (Apple IIGS only) has not been set properly (see step 2 in this section).

The window shown in Figure 7 displays test progress.

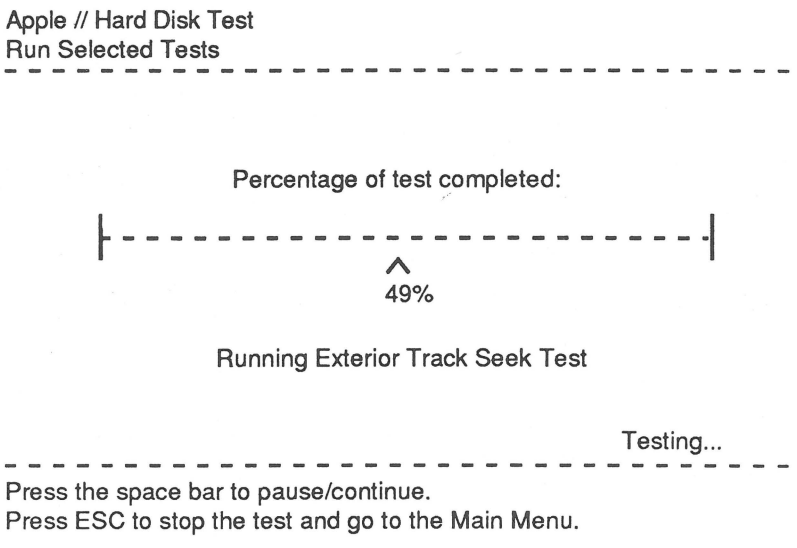

FIGURE 7

If an error is encountered, the testing stops and a box appears specifying which test failed. You may also stop the test sequence at any time by pressing <Escape>.

10. On completion, if the drive passes the test(s), the diagnostic displays the following message:

The hard disk drive test was completed successfully.

If the drive fails any of the tests, the diagnostic displays this message:

The hard disk drive has failed. Refer to Apple Technical Procedures for more information.

The diagnostic then identifies the replaceable module that has failed the test, and specifies the block (by number) where the failure occurred.

11. From the Main Menu you have several options:

- Type A to rerun the tests on another drive.
- Reconfigure the test selections.
- Type Q, and then type d to quit the diagnostic.

Apple Technical Procedures

SCSI Hard Disk Drives

Section 4 – Troubleshooting

❑ CONTENTS

4.2 Introduction
4.3 Things to Remember
4.4 Macintosh—SCSI Hard Disk Drives
4.5 Flowchart 1
4.6 Apple IIe/IIGS—SCSI Hard Disk Drives
4.7 Flowchart 2A
4.9 Flowchart 2B

❑ INTRODUCTION

This troubleshooting guide is divided into two sections:

- The first section includes procedures for troubleshooting SCSI hard disk drives using a Macintosh family system.

- The second section includes procedures for troubleshooting SCSI hard disk drives using a Apple IIe or IIGS system.

Each section contains a list of materials required, one or more flowcharts, and a table of notes for each flowchart.

"Things To Remember" covers information you need to troubleshoot the SCSI hard disk drives effectively. After you have read the information, turn to the appropriate flowcharts.

❑ THINGS TO REMEMBER

1. Be sure to stress to your customers the importance of backing up all files onto disks or tape. If you must reinitialize a SCSI hard disk drive, everything stored on it will be removed permanently—a very good reason for keeping current backup files!

2. Be sure to use appropriate **known-good software** and a **known-good system** when troubleshooting.

3. After installing a hard disk drive assembly, you will have to initialize the new disk and then copy the customer's backed-up files onto it.

4. When you return a SCSI hard disk drive assembly for exchange, it must be shipped in Apple-approved packaging. The drive should also be mounted on the internal frame that was used to ship the service module (except for the external 20 MB drive, which should be shipped *as is*).

5. **The SCSI hard disk LED is *off* when the drive is ready**. If the LED on the hard disk stays on or keeps flashing, the hard disk assembly is probably bad.

6. The SCSI hard disk assembly service modules come with resistor packs, which are necessary for correct **internal** drive functioning. The resistor packs must be removed for proper **external** drive operation. Therefore, if the drive is sluggish or inoperable, check for the presence or absence of the resistor packs, as appropriate.

❑ MACINTOSH—SCSI HARD DISK DRIVES

Materials Required

Macintosh test station
Appropriate *MacTest* diagnostic disk
Macintosh Hard Disk Test diagnostic disk
DIN-8 serial port cable (loopback connector)
SCSI loopback card
SCSI hard disk drive (to be tested)

Flowchart 1 Notes

1. This step eliminates the Macintosh SCSI circuitry as the problem. (Refer to Diagnostics in the appropriate *Apple Service Technical Procedures—Macintosh Family*) The diagnostic does not find bad SCSI connectors on the Macintosh board. To rule out this possibility, perform a visual inspection of the pins and solder joints on the SCSI connectors.

2. For external drives only, remove the top cover of the SCSI case (see Section 2, Take-Apart). Plug in the SCSI hard disk power cord, connect the hard disk to the Macintosh, and switch on the hard disk. (Do not switch on the Macintosh.)

3. For external drives, you should hear the hard disk whir. Look into the open SCSI case and make sure the fan is working.

4. For external drives, the LED is **on** when the hard disk is operating, and **off** when the heads are not moving. If the light is on after 15-20 seconds, the hard disk assembly is probably bad.

5. Refer to the Diagnostics sections in the *Apple Service Technical Procedures—Macintosh Family.*

6. *Disk First Aid* is a program that attempts to repair Macintosh HFS file structures on the SCSI hard disk. (Refer to Section 1, Basics, for more information.)

7. If the customer has not already done so, back up as many files as possible before continuing.

8. Use the *Hard Disk Installer* program to reinitialize the hard disk. (Refer to Section 1, Basics.)

9. After initializing the SCSI hard disk, recopy the customer's backed-up data onto the hard disk.

FLOWCHART 1

Macintosh — SCSI Hard Disk Drives

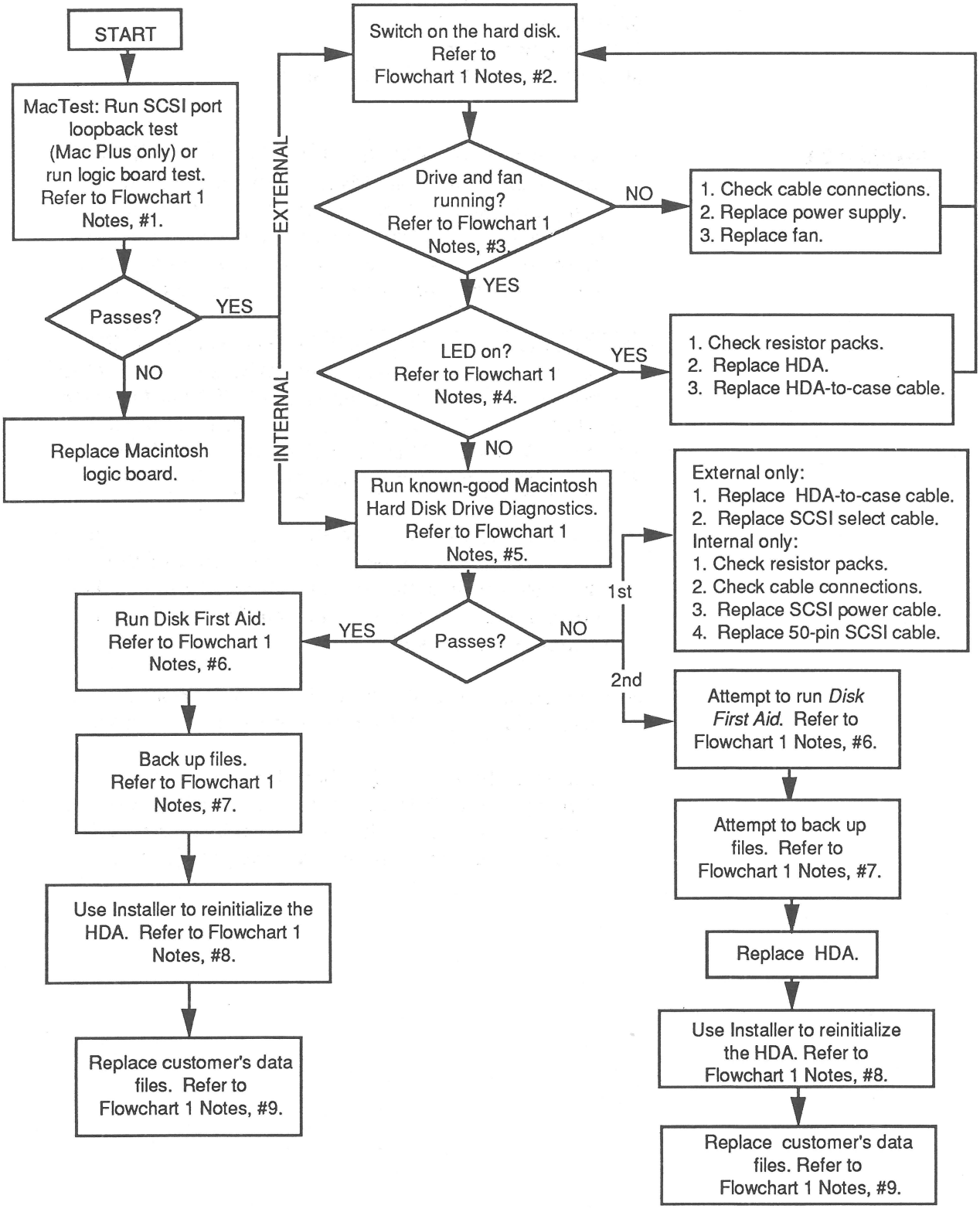

❑ APPLE IIe/IIGS—SCSI HARD DISK DRIVES

Materials Required

Apple IIe or IIGS test station
Apple II SCSI Diagnostic disk
SCSI Interface Card
SCSI Loopback Card
SCSI hard disk drive (to be tested)

Flowchart 2A Notes

1. Always test the SCSI Interface Card by itself before testing the hard disk drive. With power to the computer switched off, install the SCSI Interface Card in slot 2 and connect the SCSI Loopback Card. Then run the test. (Refer to *Apple II Family Cards Technical Procedures* for more information.)

IMPORTANT: *Firmware (ROM) installed on some SCSI Interface Cards can cause unidentifiable system crashes on the Apple IIGS. In most cases, the SCSI Interface Card would pass the diagnostic tests. For more information, see SCSI Interface Card ROM Upgrade in the Apple II Family Cards Technical Procedures.*

2. Remove the top cover of the SCSI drive (see Section 2, Take-Apart). Connect the power cord of the SCSI drive to a wall outlet and switch on the unit. (Do not connect the drive to the interface card until instructed to do so.)

3. You should hear the hard disk whir. Look into the open drive case and make sure the fan is working.

4. The LED should be **off** when the heads are not moving (the LED is **on** *only* when the hard disk is being accessed). If the light is still on after 15-20 seconds, the hard disk assembly is probably bad.

FLOWCHART 2A

Apple IIe / IIGS - SCSI Hard Disk Drives

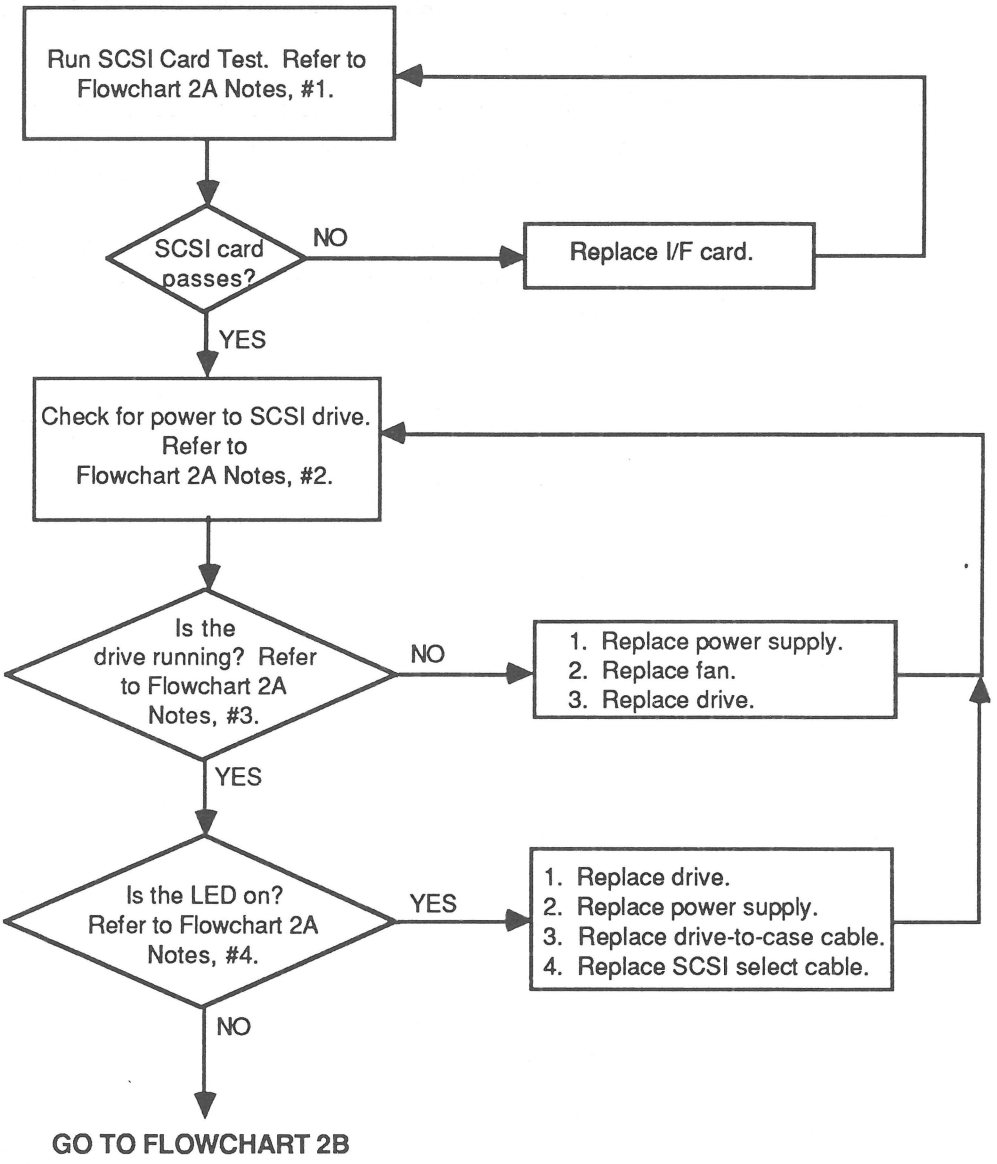

Flowchart 2B Notes

1. Switch off the computer and the SCSI drive, and disconnect the SCSI Loopback Card. Then connect the customer's SCSI drive to the SCSI Interface Card.

2. Insert the most recent *System Utilities* disk into drive 1. Select **Identify and Catalog a Disk**. Enter either the slot and drive number or the volume name for the SCSI drive. A catalog should appear for the drive.

3. Before you run the diagnostic, notify the customer that the repair process included in the diagnostic software may cause some data to be unreadable.

4. If you reformat or exchange the hard disk drive, tell the customer that he or she must reinstall all applications and data files.

FLOWCHART 2B

Apple IIe / IIGS - SCSI Hard Disk Drives

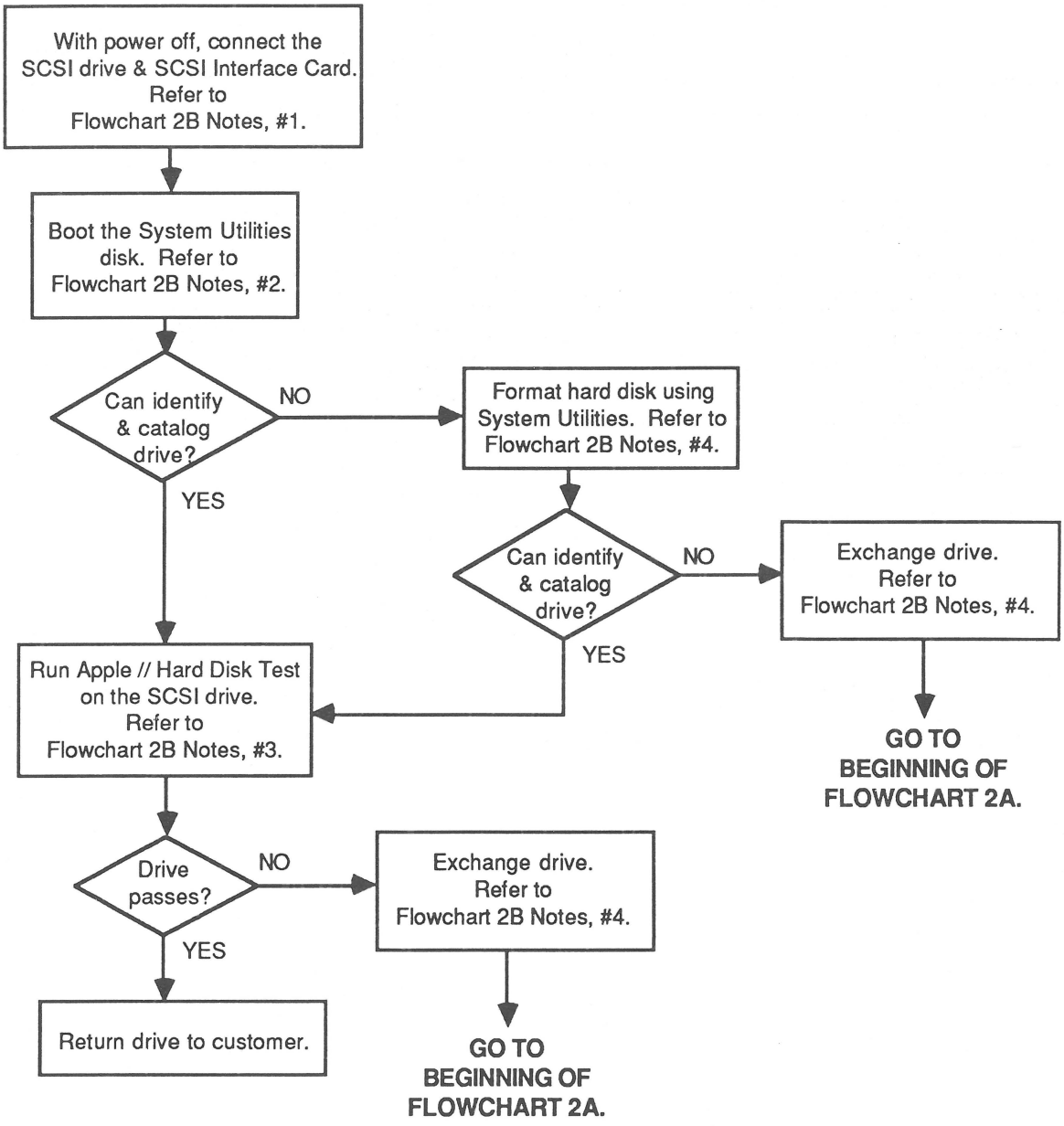

Apple Technical Procedures

SCSI Hard Disk Drives

Section 5 – SCSI Interface Card

This section has been moved to Volume II of the Apple II Family manuals, under the Apple II Family Cards tab.

Apple Technical Procedures

SCSI Hard Disk Drives

Section 6 – Additional Procedures

❑ CONTENTS

6.2 Macintosh Hard Disk 20SC Upgrade
6.4 Hard Disk Startup Problem
6.6 Macintosh Hard Disk 40SC/80SC Upgrade

❑ MACINTOSH HARD DISK 20SC UPGRADE

One model of the Hard Disk 20SC must be upgraded from Rev. 2.6A to function properly in a Macintosh II/IIx. This model is represented by the controller board shown in Figure 1. Before you install a 3.5-inch, 20 MB hard drive service module in a Macintosh II/IIx, follow the steps below to make sure you have the proper revision.

Materials Required

IC extractor
EPROM

Upgrade Procedure

1. Read and follow all ESD precautions regarding the handling of printed circuit boards and ICs. (Refer to *You Oughta Know Technical Procedures.*)

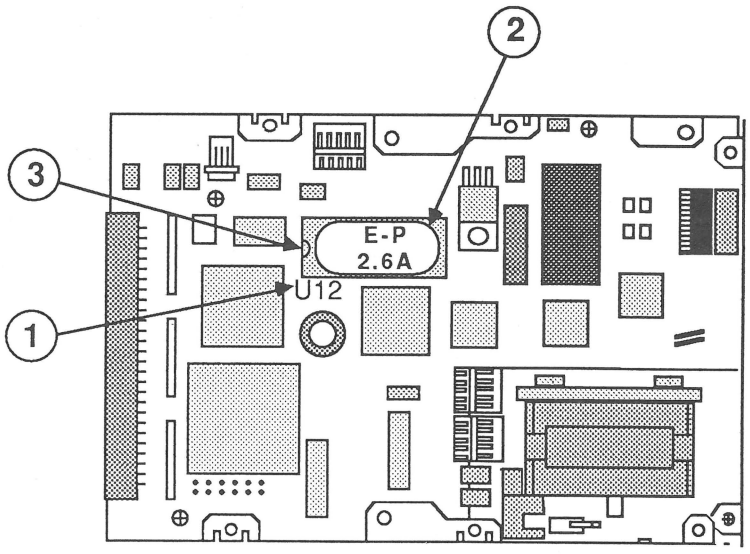

FIGURE 1

2. Compare the layout of the service module's controller board to the board layout shown in Figure 1. If they don't match, the service module does not need to be upgraded. If they **do** match, continue to step 3.

3. Locate the 28-pin EPROM at U12 (Figure 1, #1) and check to see if it is labeled "2.6A" under the heading "E-P" (Figure 1, #2). If it is, continue to step 4. (If it is **not** labeled "2.6A," nothing needs to be done.)

4. Note the direction of the notch (Figure 1, #3) at the end of the EPROM. (You will need to install the new EPROM the same way.)

5. Carefully remove the EPROM with an IC extractor.

6. Remove the new EPROM from its packaging material. Handling the new EPROM by the body only, position it over the socket so that the notch on the EPROM faces the 50-pin SCSI connector at the end of the board.

7. Carefully align the pins of the EPROM with the holes on the socket. Gently angle in the row of pins on one side; then settle in the pins on the other side. Push down to make sure the EPROM is securely seated.

8. Install the upgraded hard disk assembly in the Macintosh II/IIx, and initialize the hard disk (see Section 1, Basics).

❑ HARD DISK STARTUP PROBLEM

Some Hard Disk 40SC and Hard Disk 80SC drives exhibit a startup problem after a period of use. If the customer's hard disk drive does not exhibit the normal whine during the booting sequence, and the CPU does not recognize the drive, the hard disk assembly (HDA) must be replaced. **Before you send in the faulty HDA, however, you can retrieve the customer's data and copy it onto the replacement hard drive using the procedure and equipment below.**

Materials Required

Macintosh-family computer
External case, or sufficient blank disks to copy the customer's data

Repair Procedure

1. Remove the faulty hard disk assembly (HDA) from the customer's external case or Macintosh II/IIx. (Leave the metal mounting frame on the hard drive.)

2. Hold the HDA with the circuit board facing you. With one quick, sharp motion, rotate the HDA counterclockwise. This action should allow the HDA to start up.

3. In this step, you are going to see if the Macintosh recognizes the faulty drive and, if it does, you are going to copy the customer's data from the faulty drive to the replacement drive (service module). **The easiest way to do this is to install the replacement drive in the customer's system and the faulty drive in an extra unit, as in the first two methods that follow.** That way, you won't have to move the replacement drive after the data transfer.

   With a Macintosh II/IIx and an external case:

   a) Install the replacement drive in the customer's unit (Macintosh II/IIx or external case), and set up the faulty drive in the other unit.

   b) Connect the external case to the Macintosh II/IIx.

   c) Check that the system recognizes the faulty drive. (If it does not, repeat steps 1 and 2.)

   d) Initialize the replacement drive (see Section 1, Basics) and use the Finder to copy the customer's files from the faulty drive to the replacement drive.

With a Macintosh Plus, SE, SE/30, or Macintosh IIcx and two external cases:

a) Install the replacement drive in the customer's external drive case and the faulty drive in the extra external case.

b) Daisy-chain the external drives to the Macintosh.

c) Check that the system recognizes the faulty drive. (If it does not, repeat steps 1 and 2.)

d) Initialize the replacement drive (see Section 1, Basics) and use the Finder to copy the customer's files from the faulty drive to the replacement drive.

With a Macintosh II/IIx only:

a) Install the faulty drive in the customer's Macintosh II/IIx and check that the system recognizes the faulty unit. (If it does not, repeat steps 1 and 2.)

b) Use the Finder to copy the customer's files from the faulty drive to disks.

c) Remove the faulty drive and install and initialize the replacement drive (see Section 1, Basics).

d) Copy the customer's data from the disks to the replacement drive.

With a Macintosh Plus, SE, SE/30, or Macintosh IIcx and an external case:

a) Install the faulty drive in the customer's external case, connect it to the Macintosh, and check that the system recognizes the faulty drive. (If it does not, repeat steps 1 and 2.)

b) Use the Finder to copy the customer's files from the faulty drive to disks.

c) Remove the faulty drive from the customer's external case, and install and initialize the replacement drive in the customer's case (see Section 1, Basics).

d) Copy the customer's data from the disks to the replacement drive.

❑ MACINTOSH HARD DISK 40SC/80SC UPGRADE

Some Quantum 40 MB and 80 MB, 3.5-inch hard disk drives may experience intermittent boot-up problems. When a problem occurs, you will see a Macintosh disk icon with a flashing question mark (most common) or a dialogue box that says "Cannot Load Finder" (less common).

Only **40 MB and 80 MB drives** with variation code numbers 0032, 0034, and 0058 are affected by this problem. (The variation code number is on the small bar code label in the upper-right corner of the end where the 50-pin SCSI connector is located.) This problem can be eliminated by replacing the ROM chip (version 7.9 01) on the customer's faulty drive with the new PROM (version TA.2 01 or later).

Materials Required

ROM removal tool (orange stick)
PROM

Remove

Note: To remove the ROM chip from external drives or from drives mounted internally in a Macintosh IIcx, you must first remove the metal mounting bracket from the hard disk assembly.

CAUTION: *The disk drive controller board contains sensitive electronic circuits and components that could easily be damaged by electrostatic discharge (ESD). Before performing the following procedure, read and follow all ESD precautions outlined in* You Oughta Know *regarding handling printed circuit boards and ICs.*

1. Remove the hard disk assembly. (For internal drives, use the Take-Apart procedure for the CPU in which the drive is installed; for external drives, refer to *SCSI Hard Disk Drives Technical Procedures.*)

2. Compare the layout of the service module's controller board to the board layout shown in Figure 1, and locate the 28-pin ROM chip (Figure 1, #1) at U201 on the controller board.

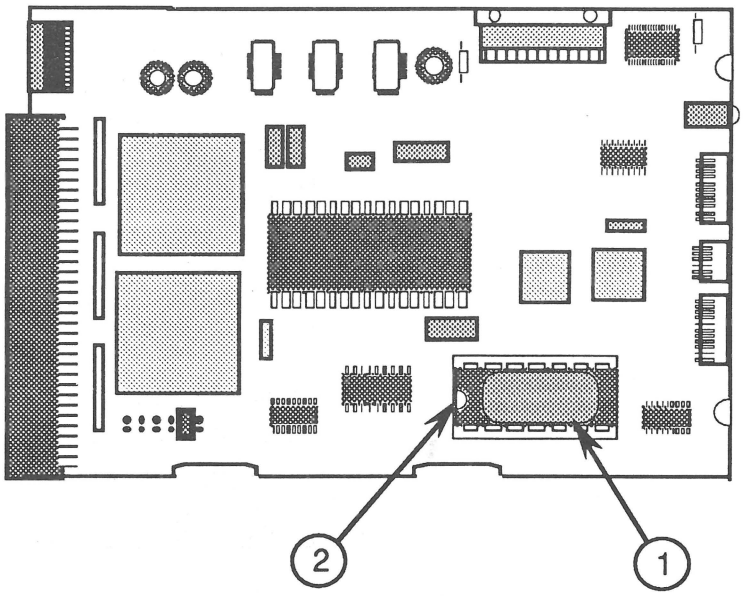

FIGURE 1

3. Carefully remove the ROM from the controller board. To do this, insert the flat edge of the orange stick under one end of the ROM chip and gently pry up the chip as shown in Figure 2. Then pry up the other end of the chip.

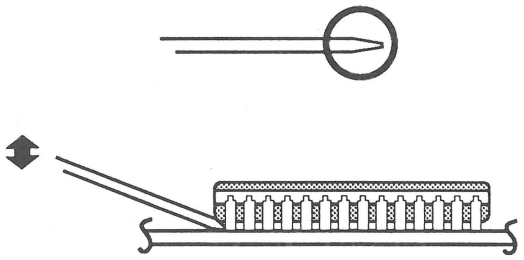

FIGURE 2

Note: Be sure to return the old ROM to Apple. No special packaging is required.

Replace

1. Remove the new PROM from its packaging material. Handling the new PROM by the body only, position it over the socket so that the notch on the PROM (Figure 1, #2) faces the 50-pin SCSI connector at the end of the controller board.

2. Carefully align the pins of the PROM with the holes on the socket. Gently angle in the row of pins on one side; then settle in the pins on the other side. Push down to make sure the PROM is securely seated.

3. Visually inspect the PROM to ensure that it is fully inserted in the socket and none of its pins are bent or broken.

   Note: For external drives and drives being mounted internally in a Macintosh IIcx computer, replace the metal mounting bracket on the hard disk assembly.

4. Replace the hard disk assembly.

5. Run the *Hard Disk Test* diagnostic program to ensure that the drive is functioning correctly (see Section 3, Diagnostics).

IMPORTANT: *When running diagnostics on a drive that has the new PROM installed,* ***be sure to run either the Bad Block Scan and Seek Test (for Hard Disk Test version 1.0) or the Random Seek Test (for Hard Disk Test version 2.0).***

If replacing this PROM does not start up a failed drive, or if the drive does not successfully complete the specified hard disk test, turn the system (and the drive if the drive is external) off for approximately 30 seconds. Turn the power on and try again. If the drive does not respond after two or three on-and-off power cycles, the drive has failed for reasons other than those covered by this repair extension program. Please return the failed drive to Apple using standard module exchange procedures.

Apple Technical Procedures

SCSI Hard Disk Drives

Illustrated Parts List

❑ CONTENTS

IPL.3 SCSI Hard Disk Drives – Complete Assembly (Figure 1)
IPL.5 External Hard Disk Assembly (HDA) – 20SC/160SC (Figure 2)
IPL.7 Hard Disk Assembly (HDA) – 40SC/80SC (Figure 3)
IPL.9 Hard Disk Assembly (HDA) – 3.5-Inch 160 MB (Figure 4)
IPL.11 SCSI Hard Disk Drives – Cables (Figure 5)
IPL.13 SCSI Hard Disk Drives – Service Packaging, 5.25 HDA (Figure 6)

The figures and lists in this section include all piece parts that can be purchased separately from Apple for the SCSI hard disk drives, along with their part numbers. These are the only parts available from Apple. Refer to your *Apple Service Programs* manual for prices.

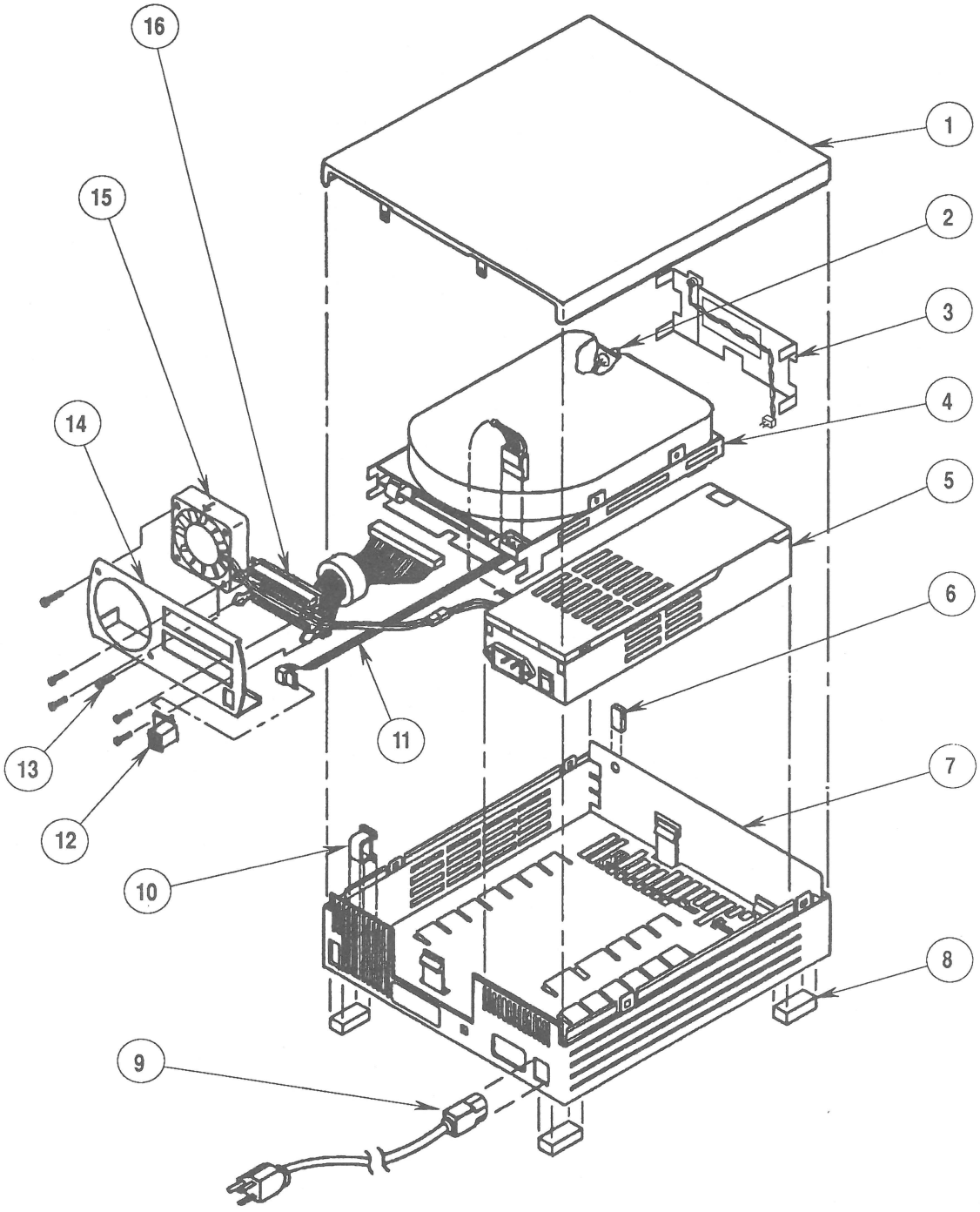

FIGURE 1

❑ SCSI HARD DISK DRIVES—COMPLETE ASSEMBLY (Figure 1)

Item	Part No.	Description
1	630-5258	Case, Top Assembly, Beige
	630-5288	Case, Top Assembly, Platinum
	630-5802	Case, Top Assembly, 160SC, Platinum
2	590-0237	LED Cable
3	076-0380	Assembled End Bracket and LED Cable, 160SC
4	805-0376	HDA Frame
	805-5081	HDA Frame 160SC
5	661-0343	Power Supply
6	815-0974	Lens
7	630-5257	Case, Plastic Bottom Assembly 20SC, Beige
	630-5287	Case, Plastic Bottom Assembly 20SC, Platinum
	630-5335	Case, Plastic Bottom Assembly 40SC
	630-5337	Case, Plastic Bottom Assembly 80SC
	630-5647	Case, Plastic Bottom Assembly 160SC
8	865-0024	Foot, Platinum
9	590-0260	Power Cable, Beige
	590-0380	Power Cable, Smoke
10	815-0975	Security D-Ring, Beige
	815-0985	Security D-Ring, Platinum
11	590-0238	SCSI Device Select Cable
12	705-0045	SCSI Select Switch Assembly
13	462-3100	Screw, M3 x .5 x 6
14	805-0375	SCSI Device Fan Bracket
15	699-0469	Fan
	699-5017	Fan, 160SC
16	590-0235	SCSI Device-to-Case Cable
	590-4037	SCSI Device-to-Case Cable, 160SC
–	341-0768	PROM, 40/80 MB Drives, TA.2 01

Note: The PROM TA.2 01 is available only for correcting disk drive startup problems with some 3.5-inch, 40 MB and 80 MB Quantum hard disk drives. Refer to "Macintosh Hard Disk 40SC/80SC Upgrade" in Section 6, Additional Procedures, for more information.

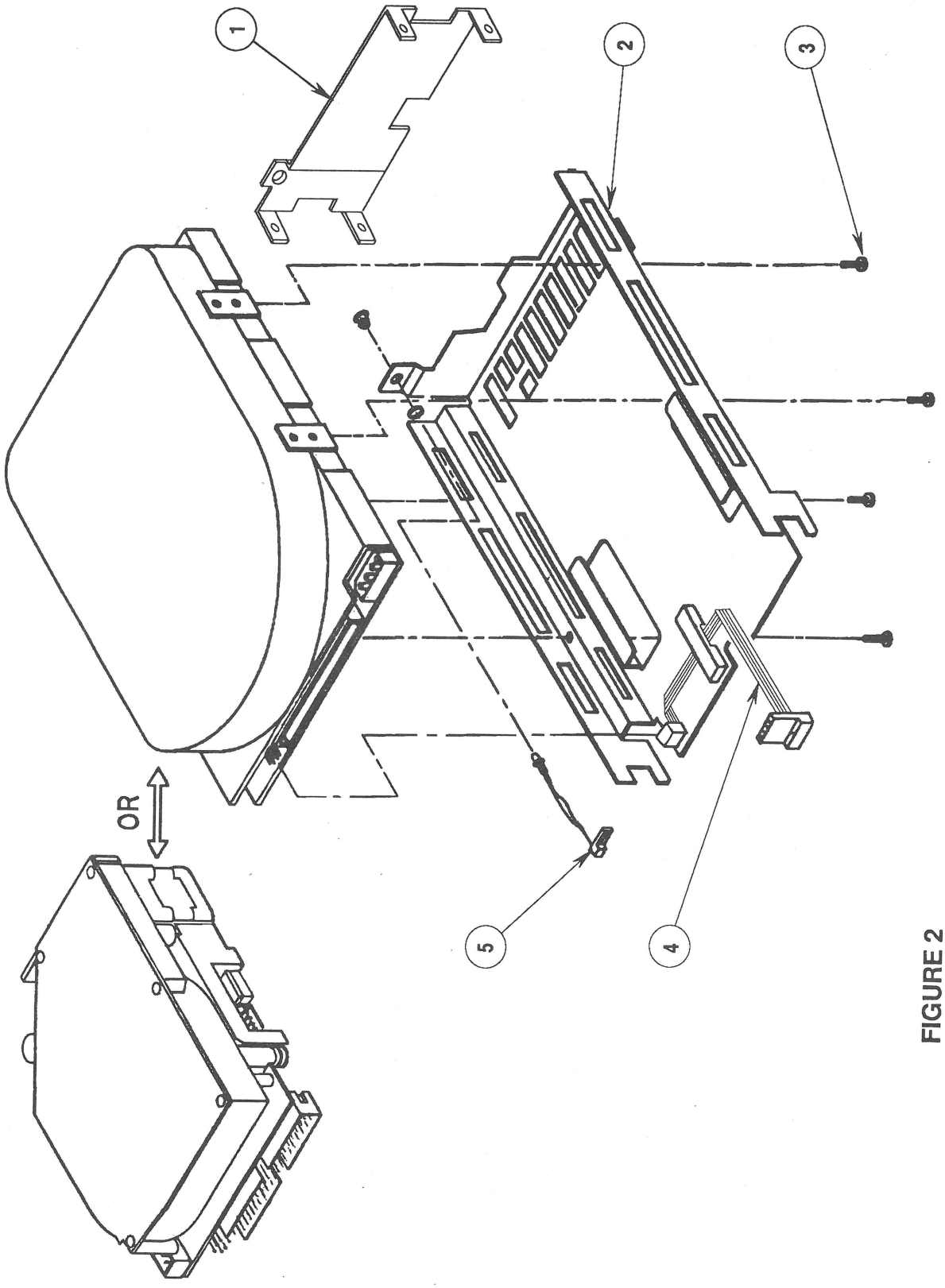

FIGURE 2

❑ EXTERNAL HARD DISK ASSEMBLY (HDA)—20SC/160SC (Figure 2)

Item	Part No.	Description
–	661-0342	HDA, External 20 MB, SCSI, Rev. A
	661-0584	HDA, External 160 MB, SCSI
–	661-0612	HDA, External 20 MB, SCSI, Rev. B
1	076-0380	Assembled End Bracket and LED Cable, 160SC
2	805-0376	HDA Frame
3	408-1603	Screw, 6-32 x 3/16
4	590-0238	SCSI Select Cable
5	590-0237	LED Cable

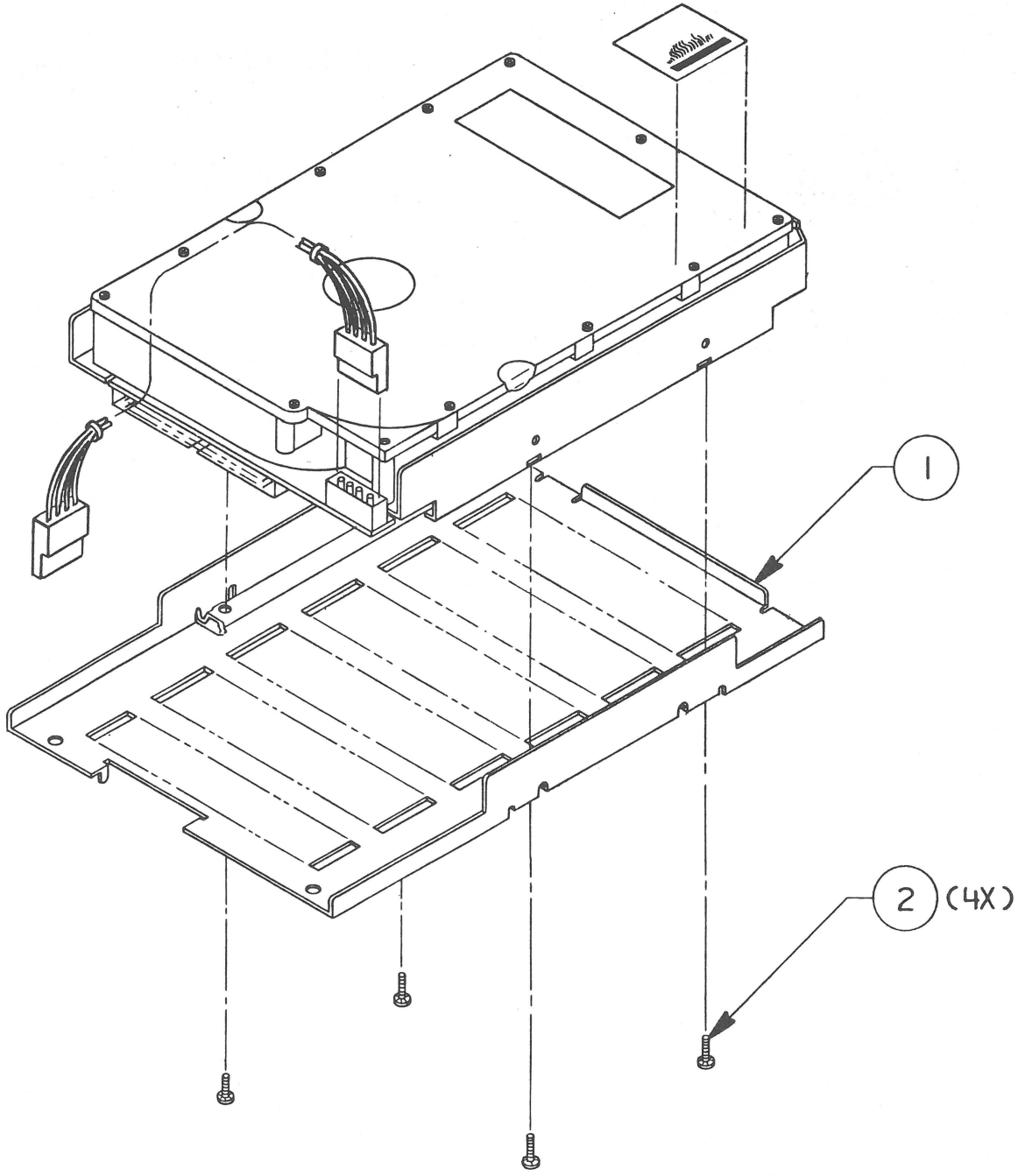

FIGURE 3

❑ HARD DISK ASSEMBLY (HDA)—40SC/80SC (Figure 3)

Item	Part No.	Description
–	661-0391	HDA, 5.25, 40 MB, SCSI
	661-0411	HDA, 5.25, 80 MB, SCSI
	661-0601	HDA, 5.25, 160 MB, SCSI
1	805-5051	Macintosh II HDA Frame
2	408-1603	Screw, 6-32 x 3/16

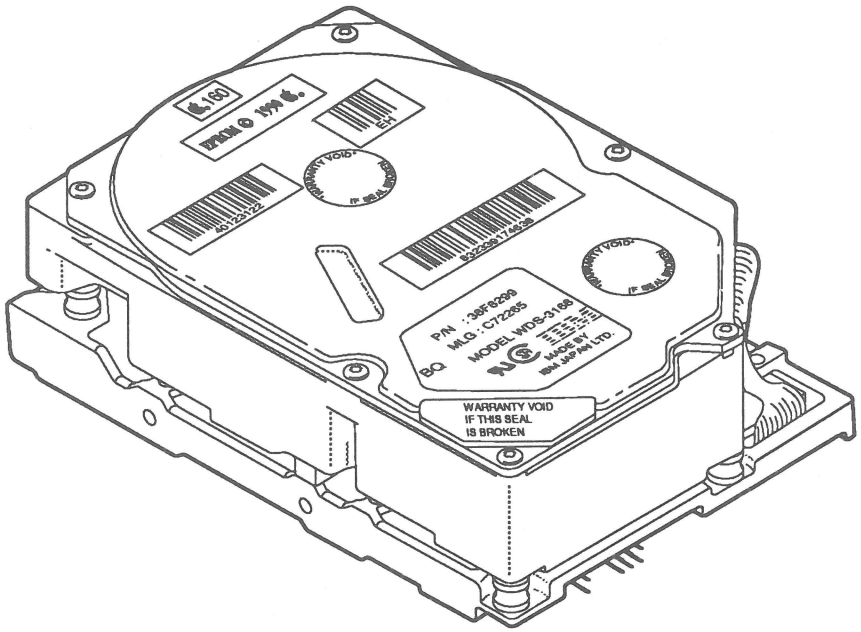

FIGURE 4

❑ HARD DISK ASSEMBLY (HDA) – 3.5-INCH 160 MB (Figure 4)

Item	Part No.	Description
–	661-0625	HDA, 3.5, 160 MB, SCSI

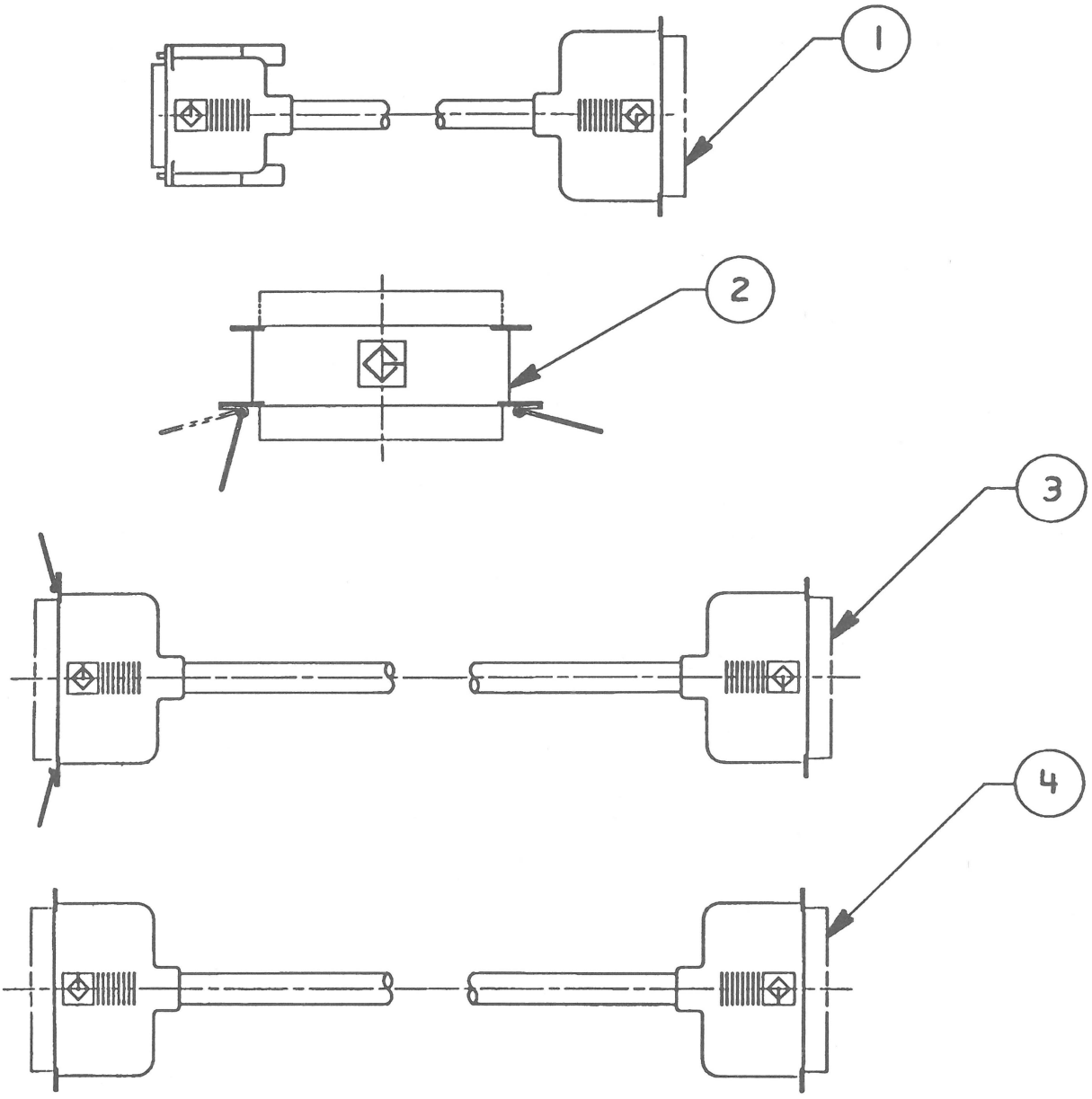

FIGURE 5

❑ SCSI HARD DISK DRIVES – CABLES (Figure 5)

Item	Part No.	Description
1	658-8031	System Cable
2	658-8032	Terminator Cable
3	658-8033	Extender Cable
4	658-8034	Peripheral Interface Cable

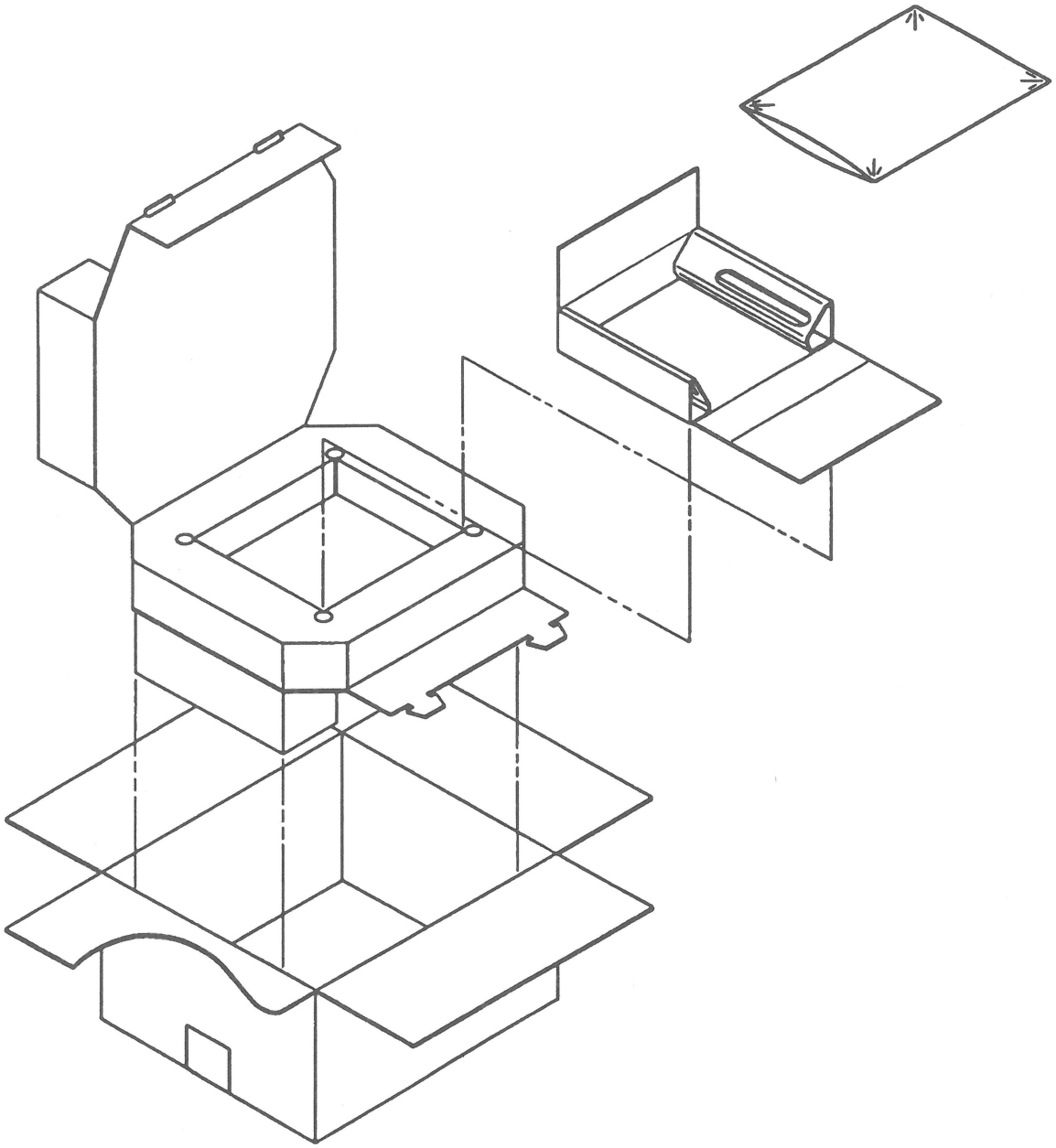

FIGURE 6

❑ SCSI HARD DISK DRIVES – SERVICE PACKAGING, 5.25 HDA (Figure 6)

Item	Part No.	Description
-	602-0148	Service Packaging, HDA

Apple Technical Procedures

Apple Tape Backup 40SC

Technical Procedures

❑ TABLE OF CONTENTS

Section 1 – Basics	1.2	Product Description
	1.2	Setup
	1.3	Rules for SCSI Devices
	1.3	Packing and Shipping Instructions
	1.4	Theory of Operation
	1.4	Introduction
	1.4	Tape Backup Mechanism
	1.5	Power Supply
Section 2 – Take-Apart	2.2	Case Top
	2.4	Power Supply
	2.6	Fan Frame
	2.8	Fan
	2.10	SCSI Device-to-Case Cable
	2.12	SCSI Select Switch
	2.14	Tape Backup Mechanism
Section 3 – Troubleshooting	3.2	Introduction
	3.2	Before You Start
	3.2	How to Use the Symptom Charts
	3.2	Things to Remember
	3.4	Setup and Software Instructions
	3.4	Materials Required
	3.4	Setup
	3.5	Back Up Files
	3.6	Restore Files
	3.7	Verification
	3.8	Symptom Chart
	3.10	Flow Chart
	3.10	Notes

Section 4 – Preventive Maintenance

4.2 Introduction
4.2 Tape Drive Mechanism Cleaning
4.2 Materials Required
4.3 Procedure
4.4 Case Cleaning

Illustrated Parts List

IPL.3 Complete Assembly (Figure 1)
IPL.5 Mechanism Assembly (Figure 2)
IPL.7 Cables (Figure 3)

©Apple Computer, Inc., 1987. No portion of this document may be reproduced in any form without the written permission of Apple Computer, Inc.

Macintosh is a trademark of Apple Computer, Inc.

Apple and the Apple logo are registered trademarks of Apple Computer, Inc.

Apple Technical Procedures

Apple Tape Backup 40SC

Section 1 – Basics

❑ CONTENTS

1.2 Product Description
1.2 Setup
1.3 Rules for SCSI Devices
1.3 Packing and Shipping Instructions
1.4 Theory of Operation
1.4 Introduction
1.4 Tape Backup Mechanism
1.5 Power Supply

❑ PRODUCT DESCRIPTION

The Apple Tape Backup 40SC is a SCSI block-type device that provides data storage on removable 40 MB magnetic tape cartridges for Macintosh computers with a SCSI port. The unit contains all of the electrical and mechanical subsystems required to support a 1/4-inch tape drive, and it also provides an intelligent SCSI port.

The Tape Backup 40SC backs up all Apple hard disks and hard disks made by most other manufacturers that use the HFS file system.

Other uses include

- Software distribution
- Database storage and distribution
- Program loading
- On-line data storage

❑ SETUP

General

The *Apple Tape Backup 40SC Owner's Guide* provides detailed instructions for setting up the Tape Backup 40SC with Macintosh systems that have

- SCSI devices connected
- Non-SCSI hard disk drives
- An internal hard disk

It also explains how to set up the Tape Backup 40SC peripheral priorities. Please see the manual for detailed instructions.

Rules for SCSI Devices

Here are some rules to follow when connecting SCSI devices:

1. **Cable system:** The total length of the cable system you use to connect a Macintosh system and other devices should be no longer than 20 feet.

2. **Terminators:** You must always end the SCSI chain with a Cable Terminator. There should never be more than two terminators in the entire SCSI chain.

CAUTION: *You can have no more than two terminators in the entire SCSI chain. More terminators can damage data integrity.*

3. **Ports:** It doesn't matter which 50-pin SCSI port you connect to on a SCSI peripheral device.

4. **Number of peripherals:** You can connect as many as seven peripheral devices to your Macintosh with the Apple SCSI cable system. The cables fit into a SCSI port on each device.

For actual setup sequences, see the *Owner's Guide.*

❑ PACKING AND SHIPPING INSTRUCTIONS

The Apple Tape Backup 40SC has been specially packaged to protect it from shock, vibration, temperature variations, and the effects of static electricity. Save all packing materials to use when you ship the Tape Backup 40SC to another location.

WARNING: *When packing and unpacking modules, take care to prevent static discharge in the Tape Backup 40SC system. Apple recommends that you use grounding straps, static control floor mats, and static control workbench mats.*

❑ THEORY OF OPERATION

Introduction

The Apple Tape Backup 40SC is made up of two main modules: the tape backup mechanism and the power supply.

Tape Backup Mechanism

The tape backup mechanism can be described as two subsystems, one mechanical and one electrical.

Mechanical Subsystem

The mechanical subsystem of the Tape Backup 40SC consists of the drive unit chassis, read/write (R/W) head, and tape drive motor.

Drive Unit Chassis

The drive unit chassis holds the tape drive motor, R/W head stepper motor, and the mechanical supports for the tape cartridge.

The tape drive motor is pivot-mounted to provide maximum engagement with the tape cartridge.

The R/W head stepper motor is mounted onto the chassis baseplate, and the R/W head is mounted directly onto the stepper motor. This assembly enables the tape drive to operate reliably in conditions with up to 5 G shock and vibration.

The tape cartridge is held in place with rollers that push the cartridge up against steel pins set into the chassis. The bezel and lens assembly (front plate) of the Tape Backup 40SC mounts directly to the chassis.

Read/Write Head

The R/W head is a subassembly consisting of the head stepper motor and the R/W head itself. The R/W head is a single-track, dual-gap, wide-write/narrow-read device.

The Tape Backup 40SC uses a ferrite and ceramic head and brushless DC drive motor. Both are designed for long life and reliable performance.

Tape Drive Motor

The tape drive motor is a high-torque, brushless DC motor mounted on a spring-loaded pivot plate. The motor shaft is capped with a rubber pinch-roller that mates to the tape cartridge roller. Motor speed is controlled by an IC under the direction of the drive controller.

Electrical Subsystem

The electrical subsystem of the Tape Backup 40SC consists of the drive module and the controller module.

Drive Module

There are no belts in the drive. The beltless design provides speed stability, lower maintenance, and extended drive life. Anticipated drive motor life is greater than 10,000 operating hours.

The drive module contains all of the electronics required to control tape speed, track positioning, and read amplifier gain and tape end sense. The drive module also provides an intelligent interface between the tape cartridge and the controller.

Controller Module

The controller module contains all of the electronics required to manage the flow of data between the Tape Backup 40SC and its SCSI port.

Power Supply

The power supply operates on standard line voltage and produces +12 and +5 volts of power.

Apple Technical Procedures

Apple Tape Backup 40SC

Section 2 – Take-Apart

❑ CONTENTS

2.2 Electrostatic Discharge Prevention
2.2 Case Top
2.4 Power Supply
2.6 Fan Frame
2.8 Fan
2.10 SCSI Device-to-Case Cable
2.12 SCSI Select Switch
2.14 Tape Backup Mechanism

Note: If a step is underlined, detailed instructions for that step can be found elsewhere in this section.

❑ ELECTROSTATIC DISCHARGE PREVENTION

Preventive measures must be taken to avoid ESD damage. When you are unwrapping, installing, or replacing any modules, observe the appropriate ESD precautions.

For complete ESD prevention information, refer to *You Oughta Know*, Section 6.

❑ CASE TOP

Materials Required

#2 jeweler's screwdriver

Remove

Remove the case top as follows:

1. Locate the two case top holding tabs on the rear of the Tape Backup, within the ventilation slots on either side of the top SCSI connector (Figure 1, #1).

   Using a jeweler's screwdriver, gently press in on the lower end of each tab, and push the center of the case top up slightly.

2. Locate the two tab holes, one on each side of the Tape Backup case (see Figure 1, #2).

   Free the tabs by gently inserting the jeweler's screwdriver **straight** into each of the holes, nudging the case top up a bit as you release each tab. **Prying is not necessary and may damage the case.**

3. When all tabs are released, lift the case free.

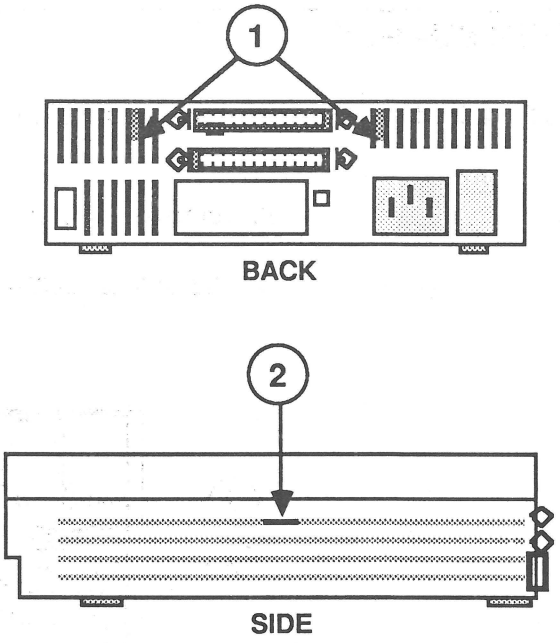

FIGURE 1

Replace

To replace the case top, fit the front of it under the front lip of the machine; then gently push the case top down, making sure the metal shields are tucked in. You will hear a click when the tabs are seated.

❑ POWER SUPPLY

Materials Required

#2 jeweler's screwdriver

Remove

To remove the power supply:

1. Remove the case top.

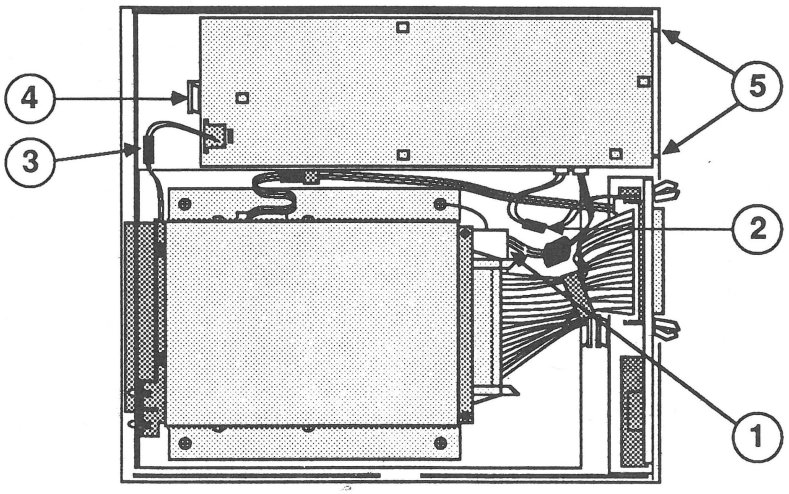

FIGURE 2

2. Disconnect the power supply cable from the tape backup mechanism (Figure 2, #1).

3. Disconnect the fan cable by releasing the little holding clip on the connector (Figure 2, #2).

4. Disconnect the LED cable (Figure 2, #3).

5. Push back the power supply holding tab (Figure 2, #4) and lift the power supply free.

Replace

To replace the power supply:

1. Slide the power supply toward the holding tabs inside the back of the case (Figure 2, #5). The plastic tabs on the bottom case fit into square holes in the power supply's metal case.

2. Settle the power supply into place so that the edge of the metal bracket fits under the large holding tab (Figure 2, #4) at the front end of the machine.

3. Connect the LED cable (Figure 2, #3).

4. Connect the fan cable (Figure 2, #2). It fits only one way.

5. Connect the power supply cable to the tape backup mechanism (Figure 2, #1). It fits only one way.

6. Replace the case top.

❑ FAN FRAME

Materials Required

Medium flatblade screwdriver
#2 jeweler's screwdriver

Remove

To remove the fan frame:

1. Remove the case top.

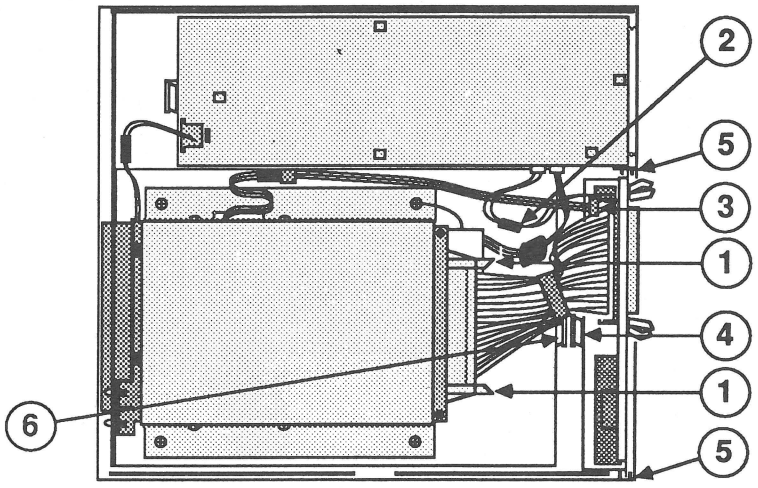

FIGURE 3

2. Open the end tabs on the SCSI device-to-case cable connector (Figure 3, #1), and disconnect it from the tape backup mechanism.

3. Disconnect the fan cable by releasing the little holding clip on the connector (Figure 3, #2).

4. Disconnect the SCSI select switch cable from the SCSI select switch (Figure 3, #3).

5. Using a flatblade screwdriver, push back the holding tab (Figure 3, #4), which secures the metal fan frame.

6. Lift out the metal frame (with fan, SCSI device-to-case cable, fan cable, and SCSI select switch attached).

Replace

To replace the fan frame:

1. Slide the side edges of the metal fan frame into the center slots of the holding tabs on the inside of the case bottom (Figure 3, #5).

2. Push back the holding tab (Figure 3, #4) and set the fan frame in place (with fan, SCSI device-to-case cable, fan cable, and SCSI select switch attached).

3. Connect the SCSI select switch cable (Figure 3, #3). It fits only one way.

4. Connect the fan cable (see Figure 3, #2). It fits only one way.

5. Connect the SCSI device-to-case cable to the tape backup mechanism with the square tab facing down, and close the end tabs (Figure 3, #1). (If the tape backup mechanism is out of position, slide its metal frame back under the holding tab—Figure 3, #6.)

6. Replace the case top.

❑ FAN

Materials Required

#1 Phillips screwdriver
#2 jeweler's screwdriver
Medium flatblade screwdriver

Remove

To remove the fan:

1. Remove the case top.

2. Remove the fan frame.

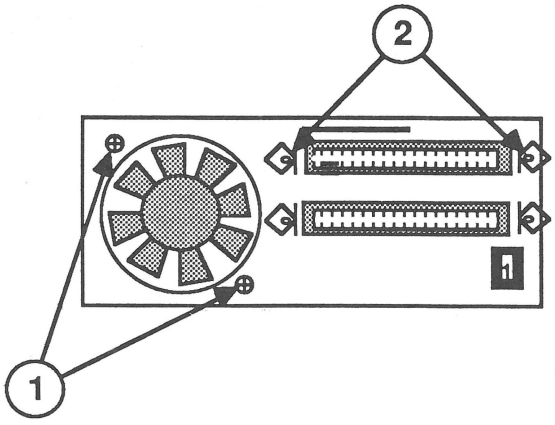

FIGURE 4

3. Remove the two screws (Figure 4, #1) that secure the fan to the frame.

4. Remove the two screws that secure the upper SCSI cable connector to the frame (Figure 4, #2). Push the connector back through the frame opening far enough to free the fan cable. Lift the fan and fan cable free.

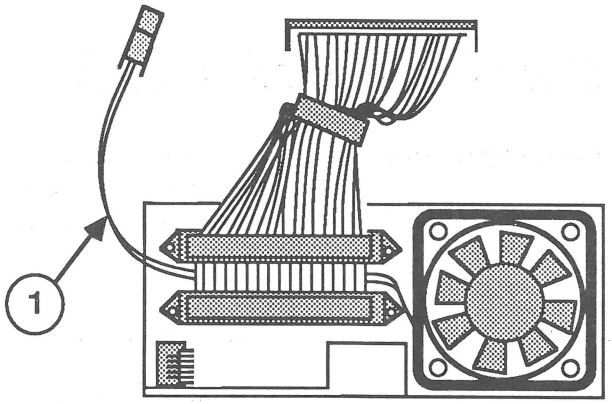

FIGURE 5

Replace

To replace the fan:

1. Set the fan in position in the fan frame.
2. Replace the two screws (Figure 4, #1) that secure the fan to the frame.
3. Lay the fan cable (Figure 5, #1) across the SCSI cable, between the two SCSI connectors. Push the upper cable connector through the opening in the frame. (Make sure the fan cable is between the SCSI cable and the fan frame and not pinched between the connector and the frame.)
4. Replace the two screws that secure the connector to the frame (Figure 4, #2).
5. Replace the fan frame.
6. Replace the case top.

❑ SCSI DEVICE-TO-CASE CABLE

Materials Required

#1 Phillips screwdriver
#2 jeweler's screwdriver
Medium flatblade screwdriver

Remove

To remove the SCSI device-to-case cable:

1. Remove the case top.

2. Remove the fan frame.

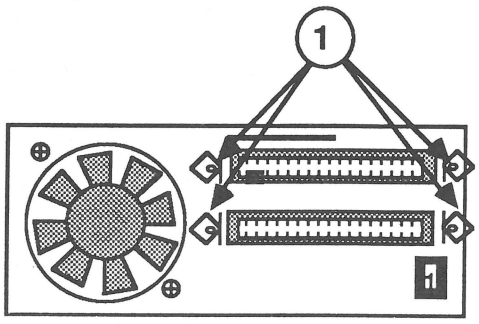

FIGURE 6

3. Remove the four screws (Figure 6, #1) that secure the SCSI cable to the frame, and lift the cable free.

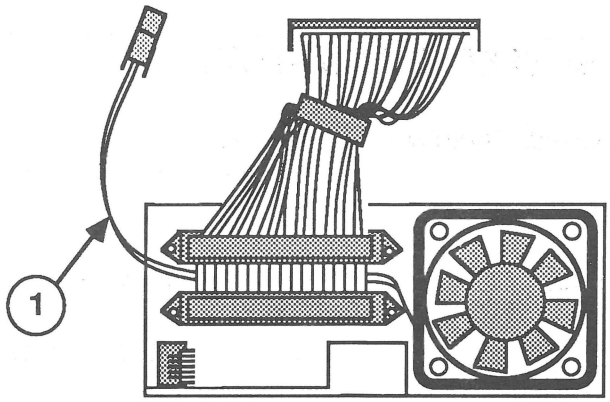

FIGURE 7

Replace

To replace the SCSI device-to-case cable:

1. Thread the fan cable (Figure 7, #1) between the two cable-connector openings in the fan frame, and then set the cable connectors in the appropriate openings. Make sure that the fan cable is not pinched by the connectors.

2. Replace the four screws (Figure 6, #1) that secure the SCSI cable to the metal frame.

3. Replace the fan frame.

4. Replace the case top.

❑ SCSI SELECT SWITCH

Materials Required

#2 jeweler's screwdriver
Medium flatblade screwdriver

Remove

To remove the SCSI select switch:

1. Remove the case top.
2. Remove the fan frame.

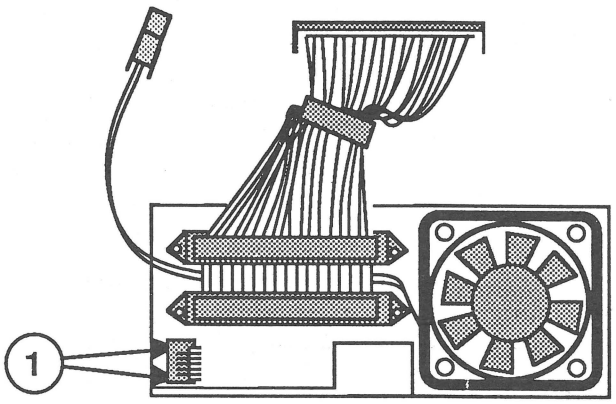

FIGURE 8

3. Use your fingers or a pair of needlenose pliers to squeeze down on all four plastic arms on the back of the switch (Figure 8, #1). Pass the switch from inside to outside through the opening in the fan frame.

   Note: You can release the plastic arms on one side at a time. On one side, squeeze the plastic arms together and push out on that side until the arms are held in by the hole in the fan frame. Then squeeze the arms together on the other side and remove the switch.

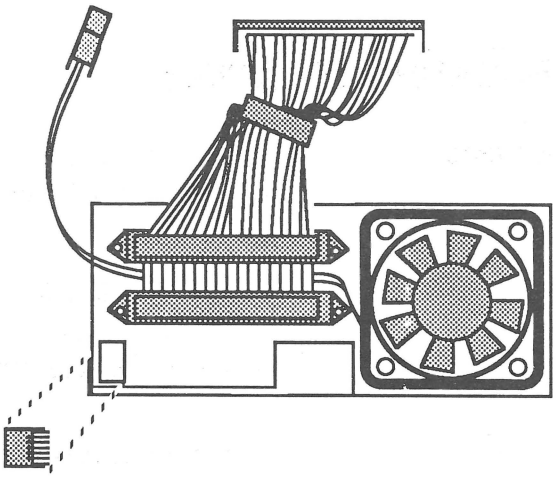

FIGURE 9

Replace

To replace the SCSI select switch:

1. Position the switch so the top of the number is toward the cable connectors. Pass the switch from outside to inside through the opening in the metal case (Figure 9). The plastic arms on the switch will lock it in place.

2. Replace the fan frame.

3. Replace the case top.

❑ TAPE BACKUP MECHANISM

Materials Required

#2 jeweler's screwdriver
Flatblade screwdriver

Remove

Remove the tape backup mechanism as follows:

1. Remove the case top.

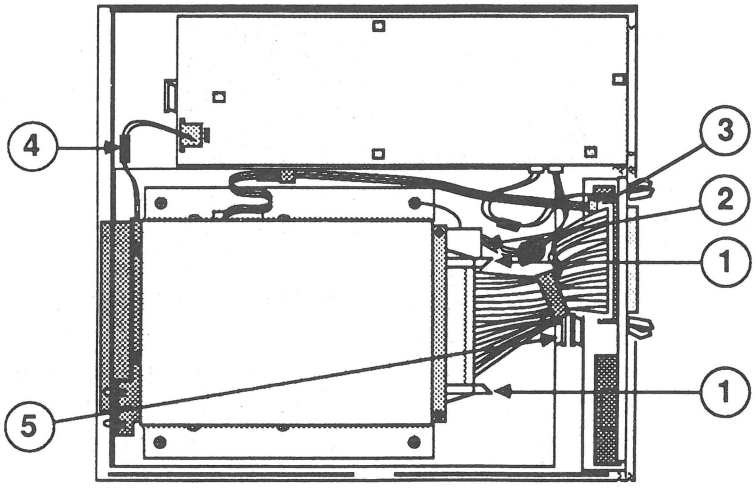

FIGURE 10

2. Open the end tabs on the SCSI device-to-case cable connector (Figure 10, #1), and disconnect the cable.

3. Disconnect the power supply cable (Figure 10, #2).

4. Disconnect the SCSI select switch cable (Figure 10, #3).

5. Disconnect the LED cable (Figure 10, #4).

6. Use a flatblade screwdriver to push back the holding tab (Figure 10, #5). Lift up the tape backup mechanism (and its baseplate) and then move the mechanism forward to free it.

   Note: If you are sending the tape backup mechanism back to Apple, **the metal frame (with LED cable and SCSI select switch cable) must be left on.**

Replace

Replace the tape backup mechanism as follows:

1. Place the mechanism in the case bottom near its final position, with the bezel and cartridge release button near their openings on the front of the case.
2. Push back the holding tab (Figure 10, #5) and carefully settle the tape backup mechanism into place.
3. Connect the SCSI select switch cable (Figure 10, #3).
4. Connect the LED cable (Figure 10, #4).
5. Connect the power supply cable (Figure 10, #2).
6. Connect the SCSI device-to-case cable to the tape backup mechanism, and close the end tabs (Figure 10, #1).
7. Replace the case top.

Apple Technical Procedures

Apple Tape Backup 40SC

Section 3 – Troubleshooting

❑ CONTENTS

3.2 Introduction
3.2 Before You Start
3.2 How to Use the Symptom Charts
3.2 Things to Remember
3.4 Setup and Software Instructions
3.4 Materials Required
3.4 Setup
3.5 Back Up Files
3.6 Restore Files
3.7 Verification
3.8 Symptom Chart
3.10 Flow Chart
3.10 Notes

❑ INTRODUCTION

Use this troubleshooting section if a known-good Macintosh is unable to recognize the tape backup or if the tape backup will not read or write the information to the tape cartridge.

Before You Start

Read the following section, "Things To Remember," before you begin troubleshooting. **You need the information provided in this section to troubleshoot the Tape Backup 40SC effectively.**

How to Use the Symptom Charts

First find the symptom that most nearly describes the problem; then perform the first corrective action on the solution list. If that corrective action does not fix the problem, go to the next one. **If you replace a module and find that the problem remains, reinstall the original module before you go on to the next action.**

If the symptoms displayed by the Tape Backup 40SC are not listed on the symptom charts, or if the system is not displaying a clearly defined problem, use the "Flow Chart" section.

❑ THINGS TO REMEMBER

ESD

1. Follow all electrostatic discharge (ESD) precautions when working on the Tape Backup 40SC. Refer to *You Oughta Know* in the *Apple Service Technical Procedures* for additional information.

Power up

2. Devices are usually switched on in the following order.

    a) External hard disks
    b) Macintosh
    c) Tape Backup 40SC (always last)

Troubleshooting Hints

3. Whenever possible, use known-good cables, software, and a known-good Macintosh Plus, SE, or II to test the Tape Backup 40SC. By using known-good items, many variables are controlled and the problem with the tape backup device can be found more quickly.

4. Set up the system for troubleshooting as indicated in "Setup and Software."

5. Don't turn on the Apple Tape Backup 40SC with the tape cartridge already installed. First turn on the machine, and then insert the tape when the software instructs you to.

Tape Backup 40SC Diskette

6. Complete instructions for using the *Tape Backup 40SC* diskette can be found in the *Apple Tape Backup 40SC Owner's Manual.*

Capacity

7. If a hard disk has more than 38.5M of data, you will need more than one formatted tape cartridge.

Restore Volume

8. Restore a tape cartridge copy of a hard disk to a hard disk of the same capacity.

9. Start up from the diskette when you are planning to restore a volume.

Backup Files

10. When backing up files, you can select whole folders, groups of folders, individual files, groups of files within a folder, or a combination of folders and files that reside on the same level of the HFS.

Restore Files

11. You can restore files that have been backed up onto any size hard disk.

12. You can only use Restore files when you have used Backup files.

13. General instructions on performing file backups and file restores for troubleshooting are included in "Setup and Software Instructions."

Apple 20 MB Hard Disks

14. When restoring files from one Apple 20 MB hard disk to another, initialize the destination disk with HD SC Setup version 1.3 or greater (on the System Tools disk).

❑ SETUP AND SOFTWARE INSTRUCTIONS

Verify that all the necessary equipment listed below is known-good. This verification will eliminate certain items that could be at fault.

If you do not have known-good test equipment, exchange the items as indicated in the appropriate symptom chart or flow chart.

Materials Required

Tape Backup 40SC diskette
Known-good Macintosh Plus, Macintosh SE, or a Macintosh II with a minimum of two floppy drives
Known-good, formatted 40M tape cartridge
Known-good SCSI system cable
Known-good SCSI cable terminator
Floppy diskette with an application and data files stored in HFS data format
Blank floppy diskette

Setup

1. All equipment should be switched off. Connect the AC power connectors to the Macintosh system and the tape backup, and plug them into a grounded wall socket.

   The Macintosh system used must have at least two disk drives. The procedures that follow are for two floppy disk drives.

2. Connect the system cable from the SCSI port on the rear of the Macintosh to the top connector on the rear of the tape backup.

   Verify that the priority switch is set to 1.

3. Connect the cable terminator to the bottom connector on the tape backup.

4. Connect the second floppy disk drive to the Macintosh. (On the Macintosh II, both floppy drives are internal.)

5. Verify that all cable connections are secure and correct.

Back Up Files

1. Insert the *Tape Backup 40SC* diskette into the internal floppy drive, and power on the Macintosh.

   The desktop should appear.

2. Power on the tape backup. There should be no tape cartridge installed. The green LED should be on steadily. If the green LED is not lit, go to the "Symptom Chart" section.

3. Open the **Tape Backup 40SC** icon.

4. Click in the **Welcome** message.

   The application desktop will appear.

5. Choose the **Backup Files** command from the **Backup/Restore** menu.

   A dialog box will appear with the contents of the selected disk.

6. Insert the floppy diskette with the HFS files into the external (or second) drive.

7. Click the drive button so that the external (or second) drive contents appear in the dialog box.

8. Highlight the application and at least two files or folders that you wish to back up; then click the **Backup** button.

9. Follow the instructions in the dialog boxes to complete the Backup Files operation.

   You will be asked to insert the tape cartridge into the tape backup unit.

   The drive adjusts the tape every time a tape is inserted (approximately 90 seconds). The drive goes to the end of the tape (EOT), then to the beginning of the tape (BOT).

The backup operation begins after the tape is adjusted. The red LED lights whenever the tape cartridge is being adjusted or accessed. You can also hear the tape drive motor. If the LED does not light or the motor does not turn on, refer to the "Symptom Chart" section.

10. Click the **OK** button in the Completion message.

11. Click the **Cancel** button to end Backup Files.

12. Eject the tape cartridge.

***CAUTION:** Never leave a tape cartridge installed. Always eject the tape cartridge. Failure to eject can result in lost or damaged data.*

---

13. Press <Command>-<Shift>-2 to eject the HFS data disk from the external (or second) drive.

Restore Files

1. Choose the **Restore Files** command from the **Backup/Restore** menu.

2. Insert the tape cartridge with the files you just backed up into the tape backup device.

   A dialog box will appear showing all the files you have backed up.

3. Highlight the files or folders you wish to restore; then click the **Restore** button.

   A dialog box will appear with the contents of the selected disk.

4. Insert a blank floppy diskette into the external (or second) drive.

5. Select the blank diskette as the volume to restore to, and click the **Restore** button.

6. Follow the instructions in the dialog boxes to complete the Restore operation.

7. Click the **OK** button in the Completion message.

8. Click the **Cancel** button to end Backup Files.

9. Eject the tape cartridge.

10. Pull down the **File** menu and select **Quit**.

    The desktop should appear.

Verification

1. Open the icon of the diskette that you restored to. The file icons will be displayed.

2. Open a data file and verify that the data was copied correctly.

❑ SYMPTOM CHART

Problems	Solutions
• *Power light does not come on*	1. Verify that AC power cord is connected. 2. Verify that power switch is turned on and fan is operating. 3. Exchange power supply. 4. Exchange tape backup mechanisim.
• *Known-good Macintosh does not recognize the tape backup device*	1. Turn off all equipment, and then turn on all equipment in the correct order. 2. Verify all cable connections and the priority setting. 3. Exchange external cables. 4. Exchange software. 5. Exchange tape mechanism. 6. Exchange power supply.
• *Hard disk crashes during a Restore operation*	1. Exchange software. 2. Verify all cable connections and the priority setting on the tape backup. 3. Exchange external cables. 4. Exchange tape backup cartridge. 5. Run Macintosh Hard Disk Drive Diagnostic. 6. Exchange tape mechanism. 7. Exchange power supply.
• *Won't back up files onto a tape cartridge*	1. Verify that files are from an HFS diskette or hard disk. 2. Exchange software. 3. Verify all cable connections and the priority setting. 4. Exchange external cables. 5. Exchange tape cartridge. 6. Exchange tape mechanism. 7. Exchange power supply.
• *Tape Backup 40SC diskette doesn't appear on the desktop*	1. Exchange software. 2. Verify that the Macintosh system is good.

Problems	Solutions
• *Backup Volume won't continue*	1. Exchange software. 2. Format tape cartridge. 3. Exchange tape cartridge. 4. Verify all cable connections and the priority setting. 5. Exchange external cables. 6. Exchange tape mechanism. 7. Exchange power supply.
• *Restore Volume is unsuccessful*	1. Find out if the blank disk capacity is smaller than the volume originally copied to the tape cartridge. 2. Exchange software. 3. Verify all cable connections and the priority setting. 4. Exchange external cables. 5. Exchange tape cartridge. 6. Exchange tape mechanism. 7. Exchange power supply.
• *Tape cannot be formatted*	1. Try to format a blank, unformatted tape cartridge. 2. Exchange software. 3. Verify all cable connections and the priority setting on the tape backup. 4. Exchange tape backup cartridge. 5. Exchange tape mechanism. 6. Exchange external cables. 7. Exchange power supply.
• *Activity light flashes, but the drive motor does not operate*	1. Eject the tape cartridge, wait for the activity light to turn off, and insert the tape cartridge. 2. Exchange tape mechanism. 3. Exchange power supply.

❑ FLOW CHART

Notes

1. Refer to the "Initial Check" instructions in this section.

2. Refer to "Setup and Software Instructions" in this section.

3. Perform the procedure again if the problem was reported as intermittent.

   Perform **Backup Volume** and **Restore Volume** if a hard disk is available.

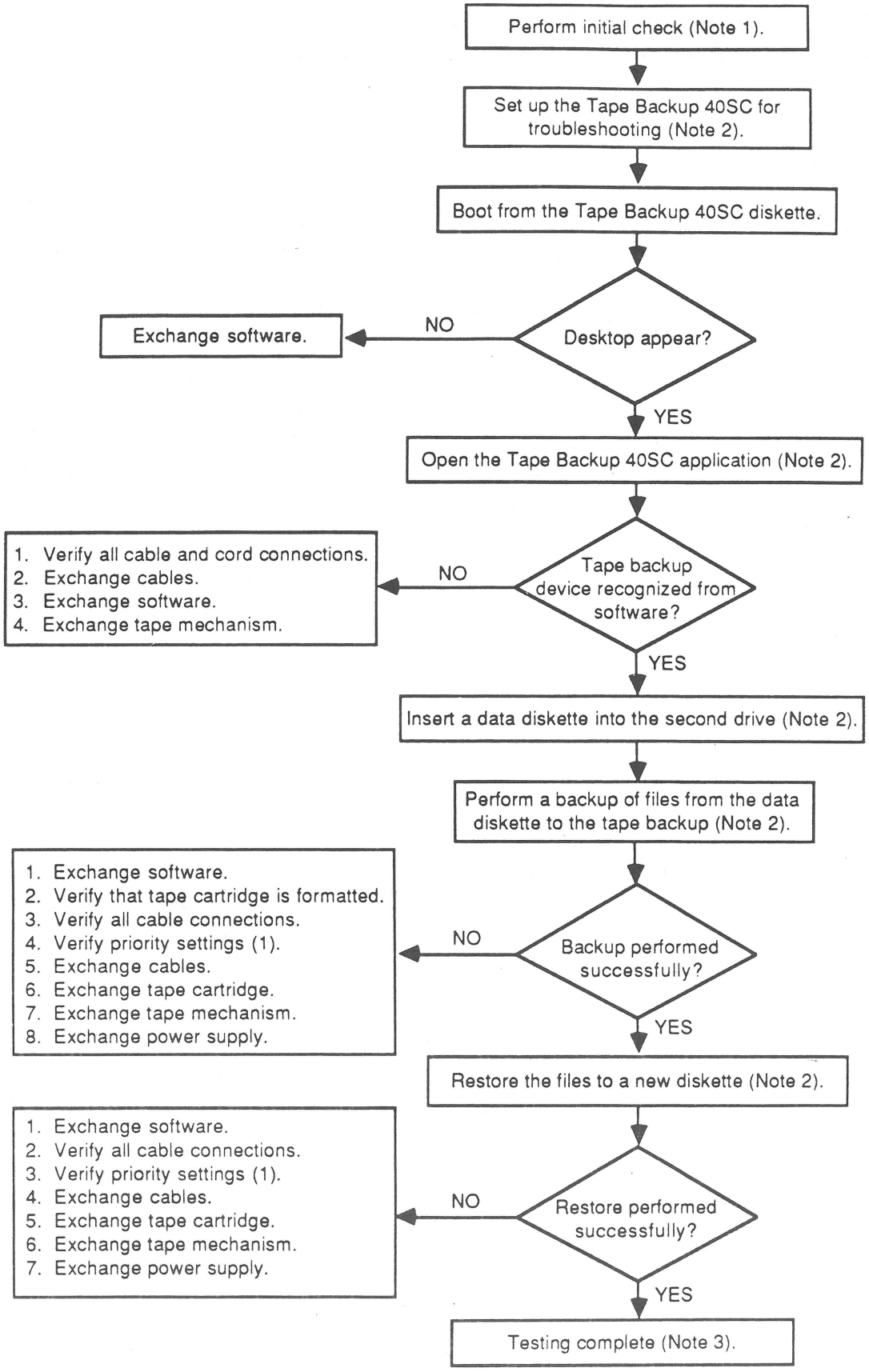
Perform initial check (Note 1).
Set up the Tape Backup 40SC for troubleshooting (Note 2).
Boot from the Tape Backup 40SC diskette.
Desktop appear?
NO
Exchange software.
YES
Open the Tape Backup 40SC application (Note 2).
Tape backup device recognized from software?
NO
1. Verify all cable and cord connections.
2. Exchange cables.
3. Exchange software.
4. Exchange tape mechanism.
YES
Insert a data diskette into the second drive (Note 2).
Perform a backup of files from the data diskette to the tape backup (Note 2).
Backup performed successfully?
NO
1. Exchange software.
2. Verify that tape cartridge is formatted.
3. Verify all cable connections.
4. Verify priority settings (1).
5. Exchange cables.
6. Exchange tape cartridge.
7. Exchange tape mechanism.
8. Exchange power supply.
YES
Restore the files to a new diskette (Note 2).
Restore performed successfully?
NO
1. Exchange software.
2. Verify all cable connections.
3. Verify priority settings (1).
4. Exchange cables.
5. Exchange tape cartridge.
6. Exchange tape mechanism.
7. Exchange power supply.
YES
Testing complete (Note 3).

Apple Technical Procedures

Apple Tape Backup 40SC

Section 4 – Preventive Maintenance

❑ CONTENTS

4.2 Introduction
4.2 Tape Drive Mechanism Cleaning
4.2 Materials Required
4.3 Procedure
4.4 Case Cleaning

❑ INTRODUCTION

The Apple Tape Backup 40SC is designed to be easily maintained. You can use replacement modules to repair a malfunctioning system in minutes. Because the subassemblies or service modules are interchangeable and need only to be properly mounted, you will not need to make critical adjustments. Refer to Section 2, Take-Apart, for details on service modules and their mounting.

To assure continuous high-performance operation of the Tape Backup 40SC, the following actions and precautions are recommended.

❑ TAPE DRIVE MECHANISM CLEANING

Regular cleaning of the tape drive mechanism is recommended to ensure the accuracy of data copied in backup and restore operations. The cleaning schedule should be adjusted for the environment and frequency of use. For example:

Environment	Multiple daily backups	Single daily backup
Office	Weekly	Monthly
Industrial	Daily	Weekly

Since a dirty tape drive mechanism can cause errors during backup and restore operations, you should always inspect and clean the Tape Backup 40SC before testing. If you determine that a problem was caused by a dirty tape drive mechanism, refer the customer to the *Apple Tape Backup 40SC Version 1.1 Update* manual for cleaning instructions.

Materials Required

Long-handle cotton swabs
99% isopropyl alcohol
A nonconductive utensil, such as a pen or pencil

Procedure

Follow these steps to clean a Tape Backup 40SC:

Note: Before doing the following steps, make sure there is a terminator plugged into the SCSI port on the back of the tape backup unit. If there is no terminator, the puck will not spin.

1. Make sure the Tape Backup 40SC is plugged in and turned on.

2. Saturate a swab tip with alcohol.

CAUTION: *Never clean the magnetic head with any head cleaner that contains corrosive or abrasive ingredients. For best results, use isopropyl alcohol only.*

3. Insert the nonconductive utensil into the left side of the tape drive and use it to press the lower tape drive button (Figure 1). Then insert the swab and hold the tip firmly against the left side of the puck. While the puck is rotating, move the swab up and down until the motor automatically stops (about 20 seconds).

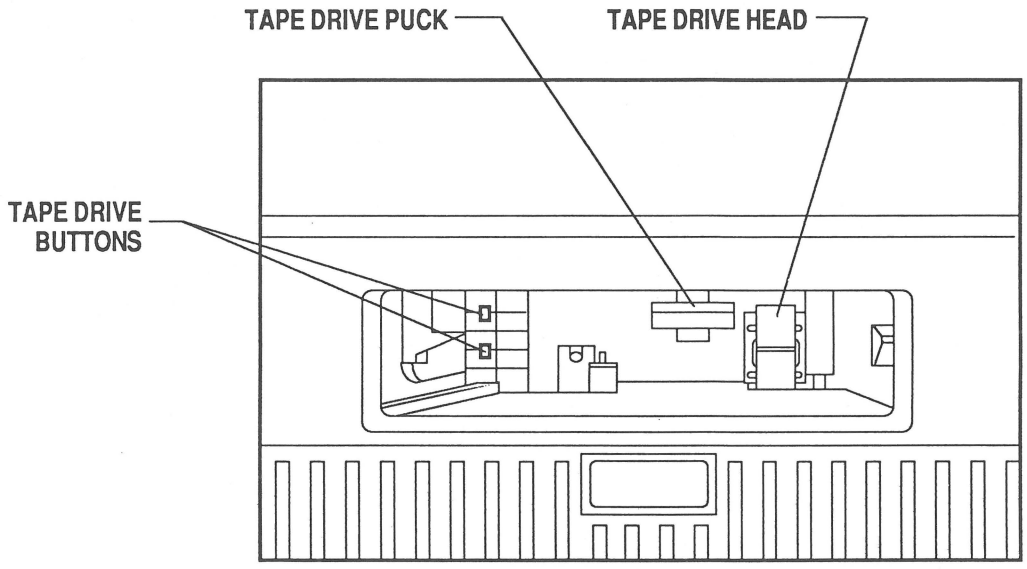

FIGURE 1

4. Release the button and remove the swab.

5. Saturate the tip of another swab with alcohol. *Do not reuse the swab used for cleaning the puck.*

6. Insert the swab, and gently but firmly rub it up and down against the tape drive head. Make sure that the entire head surface gets clean. Cleaning should take about 5 to 10 seconds.

   Wait 5 minutes to be sure the tape head is dry before you insert a tape cartridge into the drive.

❑ CASE CLEANING

If the system is operated where the air quality is poor (dusty, humid, or smoky), the exterior and interior of the system will require periodic cleaning with a nonactive, nonabrasive cleaning agent. Be sure that all ventilation holes in the case are free of dirt.

Apple Technical Procedures

Tape Backup 40SC

Illustrated Parts List

❑ CONTENTS

IPL.3 Tape Backup 40SC – Complete Assembly (Figure 1)

IPL.5 Tape Backup 40SC – Mechanism Assembly (Figure 2)

IPL.7 Tape Backup 40SC – Cables (Figure 3)

The figures and lists above include all piece parts that can be purchased separately from Apple for the Tape Backup 40SC, along with their part numbers. These are the only parts available from Apple. Refer to your *Apple Service Programs Manual* for prices.

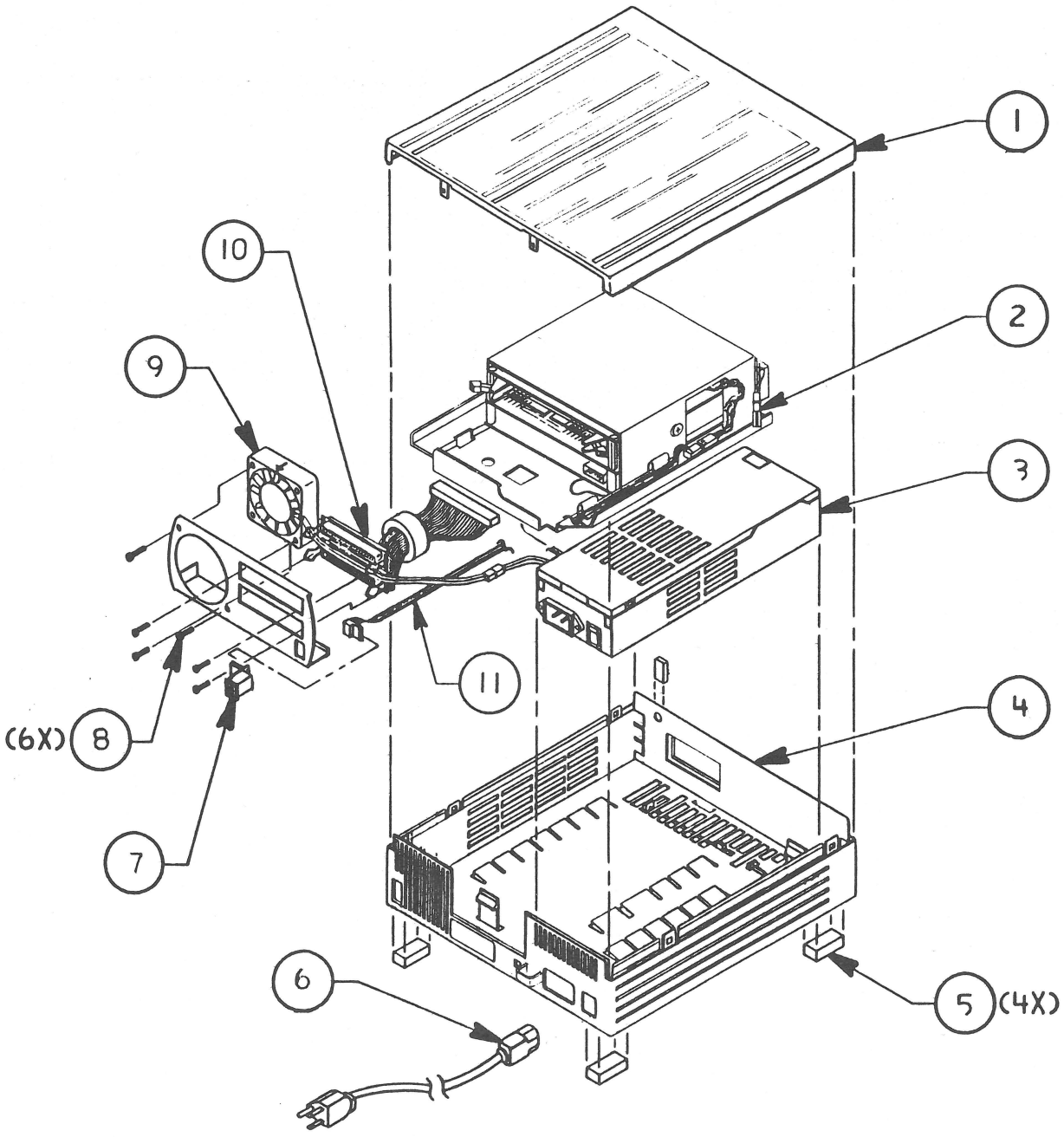

FIGURE 1

❑ TAPE BACKUP 40SC - COMPLETE ASSEMBLY (Figure 1)

Item	Part No.	Description
1	630-5298	Case Top
2	661-0392	Tape Backup Mechanism, 40M
3	661-0343	Power Supply
4	630-5297	Case Bottom
5	865-0024	Foot, Platinum
6	590-0380	Power Cable, Platinum
7	705-0045	SCSI Select Assembly Switch
8	462-3100	Screw, M3 x .5 x 6
9	699-0450	Fan
10	590-0235	SCSI Device-to-Case Cable
11	590-0238	SCSI Select Cable

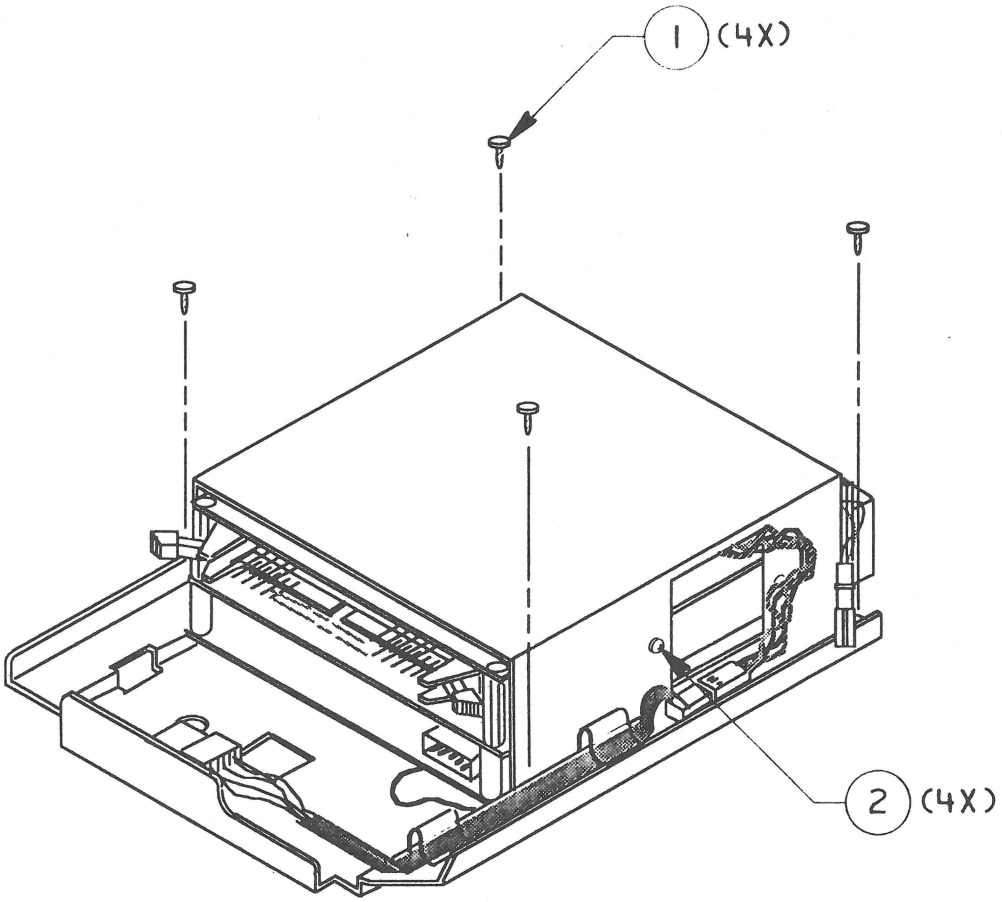

FIGURE 2

❑ TAPE BACKUP 40SC – MECHANISM ASSEMBLY (Figure 2)

Item	Part No.	Description
-	661-0392	Tape Backup Mechanism, 40M
1	408-1603	Screw, 6-32 x 3/16
2	408-1403	Screw, 4-40 x 3/16

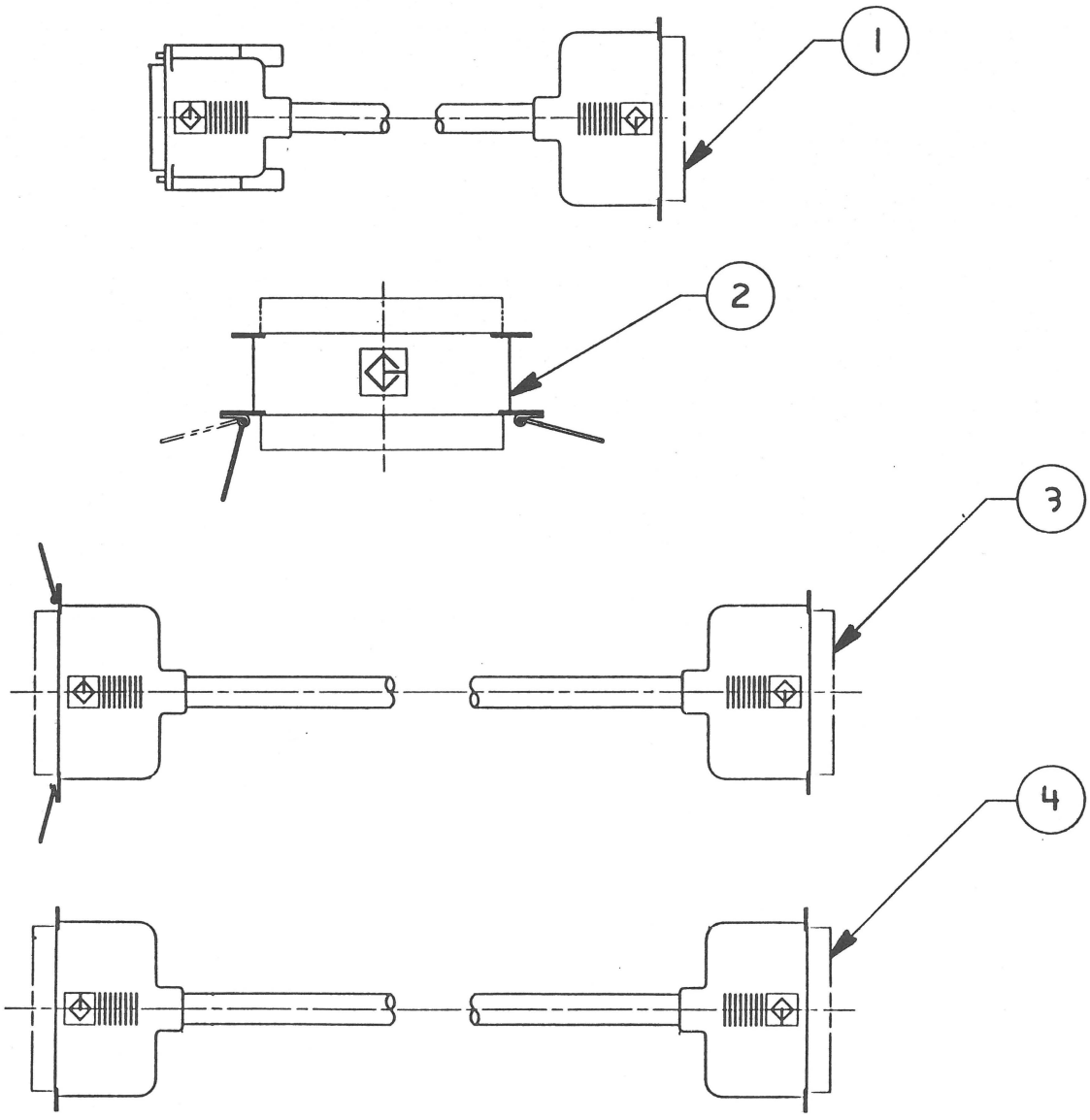

FIGURE 3

❑ TAPE BACKUP 40SC – CABLES (Figure 3)

Item	Part No.	Description
1	658-8031	System Cable
2	658-8032	Cable Terminator
3	658-8033	Cable Extender
4	658-8034	Peripheral I/F Cable

Apple Technical Procedures

AppleCD SC

Technical Procedures

❑ TABLE OF CONTENTS

Section 1 – Basics

1.2 Product Description
1.2 Small Computer System Interface
1.3 Setup
1.3 Connecting SCSI Devices
1.3 Rules for SCSI Devices
1.5 Care and Handling
1.5 Handling Precautions
1.5 ESD Prevention
1.5 Preventive Maintenance

Section 2 – Take-Apart

2.2 Case Top
2.4 Power Supply
2.6 LED Board
2.7 CD SC Drive Mechanism
2.10 Headphone Board
2.12 Fan Frame
2.14 Fan
2.15 SCSI-Device-to-Case Cable
2.16 SCSI Select Switch
2.18 Rear Audio Board

Section 3 – Diagnostics

3.2 Using AppleCD Test
3.2 Materials Required
3.2 Hardware Setup
3.3 Starting AppleCD Test
3.4 The Tests
3.5 Selecting Tests
3.6 Checking the SCSI Configuration
3.6 Running the Tests

Section 4 – Troubleshooting	4.2	Introduction
	4.2	Using the Symptom Chart
	4.2	Using the Troubleshooting Flowchart
	4.3	Symptom Chart
	4.4	Troubleshooting Flowchart
Section 5 – Additional Procedures	5.2	Repair Extension Program
	5.2	Materials Required
	5.2	Introduction
	5.2	Procedure
Illustrated Parts List	IPL.3	AppleCD SC Drive Mechanism (Figure 1)

©Apple Computer, Inc., 1988, 1990. No portion of this document may be reproduced in any form without the written permission of Apple Computer, Inc.

Apple, Macintosh, Apple IIGS, AppleCD SC, and the Apple logo are registered trademarks of Apple Computer, Inc.

AppleCD SC

Section 1 – Basics

❑ CONTENTS

1.2 Product Description
1.2 Small Computer System Interface
1.3 Setup
1.3 Connecting SCSI Devices
1.3 Rules for SCSI Devices
1.5 Care and Handling
1.5 Handling Precautions
1.5 ESD Prevention
1.5 Preventive Maintenance

❑ PRODUCT DESCRIPTION

The AppleCD SC™ is a compact disc, read-only memory (CD-ROM) drive designed to read information stored on CD-ROM discs and to play music recorded on standard audio compact discs. The unit can be connected to the following systems:

- Macintosh Plus
- Macintosh SE
- Macintosh II
- Apple II Plus
- Apple IIGS
- Apple IIe

The AppleCD SC contains all the opto-mechanical and electrical subsystems required to read and convert data stored on CD-ROM discs into digital information that the host computer can translate into text, graphics, or sound. In addition, the AppleCD SC can convert digitally recorded sound on audio compact discs into audio signals that are amplified and played through stereo jacks on the AppleCD SC.

Small Computer System Interface

The AppleCD SC is also a SCSI device that communicates with the host Macintosh or Apple II computer through a SCSI port. Small Computer System Interface (or SCSI) is a standard method of sending information back and forth between a computer and a variety of peripheral devices. This standard enables several SCSI devices to share the same port on the back of the computer and to share the same fast, efficient way of exchanging information with the computer and with each other.

❑ SETUP

The *AppleCD SC Owner's Guide* provides detailed instructions on setting up the AppleCD SC with both Macintosh and Apple II computer systems. The manual also provides information on:

- Setting the SCSI priority number
- Using CD-ROM discs
- Playing audio compact discs

Please refer to the *AppleCD SC Owner's Guide* for specific instructions.

❑ CONNECTING SCSI DEVICES

The AppleCD SC is connected to the SCSI port on the rear of the Macintosh Plus, the Macintosh SE, or the Macintosh II, or to a SCSI Interface Card installed in the Apple II Plus, Apple IIe, or the Apple IIGS. If one or more devices are already connected to the SCSI port, or to the SCSI Interface Card, connect the AppleCD SC to a SCSI port on the last device in the SCSI chain.

Rules for SCSI Devices

Here are some rules to follow when connecting the AppleCD SC to a Macintosh or Apple II computer:

1. **Cable system:** The total length of the cable system you use to connect a Macintosh or Apple II system and other devices should be no longer than 20 feet.

2. **Terminators:** You must always end the SCSI chain with a cable terminator.

CAUTION: *You can have no more than two terminators in the entire SCSI chain. More terminators can damage data integrity.*

3. **Ports:** You may connect the SCSI system cable to either SCSI port on a SCSI peripheral device.

4. **Number of peripherals with Macintosh computers:** You can connect up to seven SCSI devices to the SCSI port on your Macintosh computer.

5. **Number of peripherals with Apple II computers:** Depending upon which slot you use and what operating system your software uses, you can connect either four or two SCSI devices to one SCSI Interface Card on the Apple II. If the SCSI Interface Card is installed in slot 5 and the operating system software is ProDOS, four peripheral devices can be attached to the SCSI Interface Card. If the card is installed in any other slot and the operating system software is ProDOS, only two peripheral devices may be connected to the SCSI Interface Card.

For detailed setup instructions, see the *AppleCD SC Owner's Guide*.

❑ CARE AND HANDLING

Handling Precautions

The AppleCD SC is a mechanical device with moving parts. Rough handling such as dropping or bumping (especially when it is running) can cause mechanical failures. Please keep the following guidelines in mind when handling or repairing the AppleCD SC:

- Keep the AppleCD SC in the original shipping containers until you are ready to install it.
- Place the AppleCD SC on a soft, grounded surface before performing any repair procedure.
- Never transport the AppleCD SC with a CD-ROM or a caddy inside.
- Never use the AppleCD SC when it is set on its side. Operate it in the upright position only.

ESD Prevention

Some of the components in the AppleCD SC are sensitive to electrostatic discharge (ESD), which may be generated by your body, your clothing, or articles in the environment. When repairing the AppleCD SC, be sure to

- Keep the AppleCD SC mechanism in its antistatic bag until you are ready to install it in the case.
- Always work on a grounded mat and use a grounding wriststrap.
- Keep common plastics, vinyl, polyester, and styrofoam away from the AppleCD SC.

Preventive Maintenance

The following preventive maintenance tips will help to keep the AppleCD SC running smoothly:

- Wipe the caddy, inside and out, with a soft, lint-free cloth.
- Wipe disks with a straight motion, moving from the center of the disk to the outside edge.

AppleCD SC

Section 2 – Take-Apart

❑ CONTENTS

2.2 Case Top
2.4 Power Supply
2.6 LED Board
2.7 CD SC Drive Mechanism
2.10 Headphone Board
2.12 Fan Frame
2.14 Fan
2.15 SCSI-Device-to-Case Cable
2.16 SCSI Select Switch
2.18 Rear Audio Board

Note: If a step is underlined, detailed instructions for that step can be found elsewhere in this section.

Note: The illustrations in this section show the AppleCD SC with a fan connected to the power supply. Your unit may be slightly different—it may be built without a fan, or it may already have the fan disconnected.

❑ CASE TOP

Materials Required

Small flatblade screwdriver

Remove

Follow the steps below to remove the case top:

1. Locate the two holding tabs on the rear of the hard disk, on either side of the top SCSI connector (Figure 1, #1).

2. Using a small flatblade screwdriver, press in gently on the lower end of each tab as you push the case top up slightly.

3. Locate the four tab holes, two on each side of the case top (see Figure 1, #2). Starting with the bottom holes, free the tabs by gently inserting the screwdriver **straight** into each of the holes, nudging the case top up as you release each tab. **Prying is not necessary and may damage the case.**

4. When all tabs are released, lift the case free.

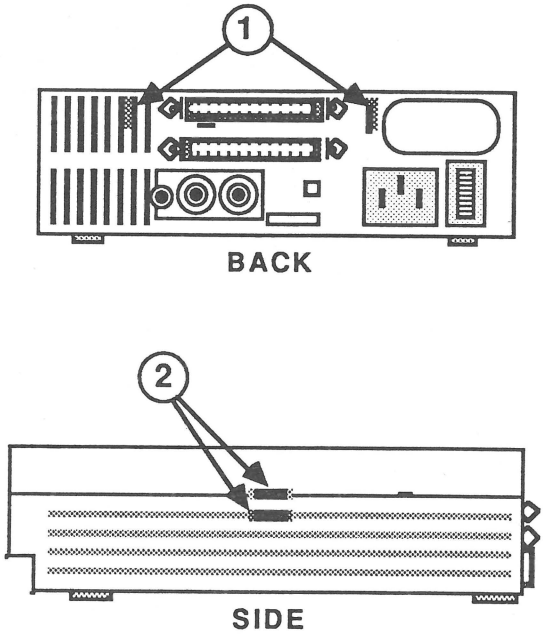

FIGURE 1

Replace

Follow the steps below to replace the case top:

1. Fit the front of the case top over the front lip of the case bottom. Be sure to align the four tabs on the case top with the four tab holes on the case bottom.

2. Gently push the case top down, making sure the plastic tabs are tucked in. You will hear a click when the tabs are seated.

❑ POWER SUPPLY

Materials Required

Small flat-blade screwdriver

Remove

Remove the power supply as follows:

1. Remove the case top.

2. Push back the power supply tab (Figure 2, #1), lift up the front edge of the power supply, slide the power supply forward, and rest it on the front of the case.

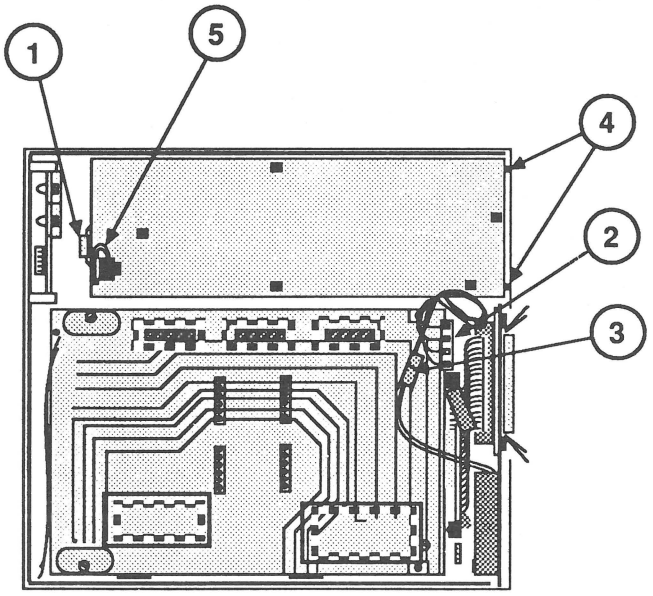

FIGURE 2

3. Disconnect the power supply cable from the CD SC drive mechanism (Figure 2, #2).

4. If a fan is connected to the power supply, disconnect the fan cable by releasing the little holding clip on the connector (Figure 2, #3).

5. Lift the power supply free.

Replace

Replace the power supply as follows:

1. Place the power supply loosely into the drive case with its front edge resting on the front edge of the case.

2. Connect the power supply cable to the CD SC drive mechanism (Figure 2, #2). It fits only one way.

3. If the AppleCD SC does not have a fan, go to step 4.

   If the AppleCD SC contains a fan, **do not connect** the fan to the power supply. Use of a fan causes the optical lens to become contaminated by dust and other airborne particles. Therefore,

   a) Tape the power supply end of the fan cable (the small black-and-red cable that emerges from the side of the power supply) to the top of the power supply.

   b) Tuck the cable that is still connected to the fan into the empty space in front of the fan.

4. Carefully slide the power supply toward the tabs on the inside back of the case bottom (Figure 2, #4) until the tabs fit into the holes in the power supply's metal case.

5. Carefully settle the power supply into place, so that the edge of the metal bracket fits under the front power supply tab (Figure 2, #1).

   Note: The power supply will have two cables taped to the top—a black-and-orange cable that emerges from the small opening on the top of the power supply and is shown in Figure 2, #5, and the black-and-red cable that you taped in step 3a. **These cables do not connect to any part of the AppleCD SC.**

6. Replace the case top.

❑ LED BOARD

Materials Required

Small flatblade screwdriver

Remove

To remove the LED board:

1. Remove the case top.

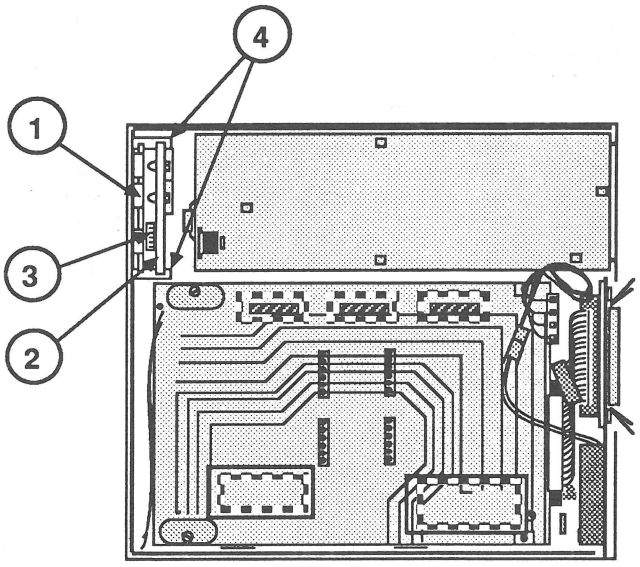

FIGURE 3

2. Push the metal LED shield (Figure 3, #1) forward and lift out the LED board (Figure 3, #2).

3. Disconnect the LED cable (Figure 3, #3) from the LED board.

Replace

To replace the LED board:

1. Connect the LED cable (Figure 3, #3) to the LED board.

2. While pushing the metal LED shield (Figure 3, #1) forward, slide the side edges of the LED board (Figure 3, #2) into the slots of the holding tabs located on the inside of the case bottom (Figure 3, #4).

3. Replace the case top.

❑ CD SC DRIVE MECHANISM

Materials Required

Small flatblade screwdriver

Remove

Remove the CD SC drive mechanism as follows:

1. Remove the case top.
2. Remove the power supply.
3. Remove the LED board.

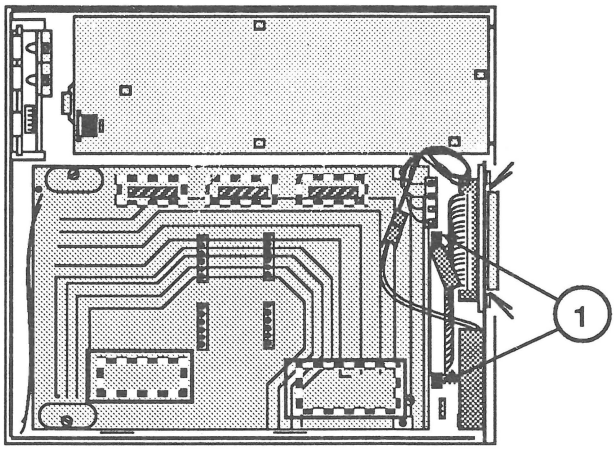

FIGURE 4

4. Open the end tabs on the SCSI device-to-case cable connector (Figure 4, #1) and disconnect the cable from the CD SC drive mechanism.

5. Disconnect the SCSI select switch cable (Figure 5, #1).

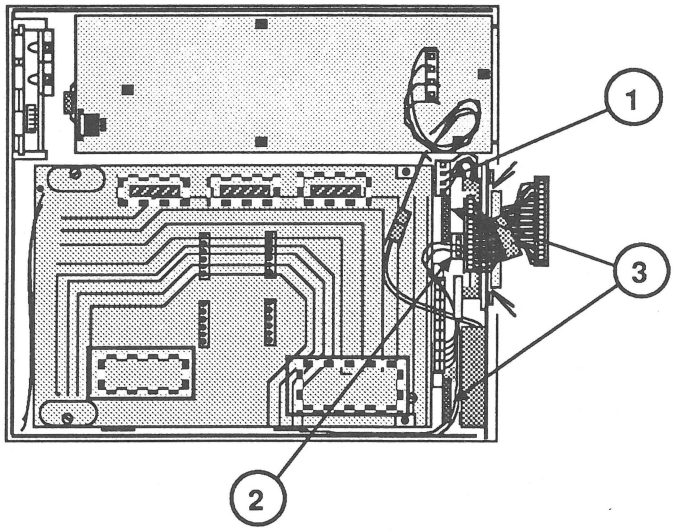

FIGURE 5

6. Disconnect the audio cable (Figure 5, #2) from the rear audio board.

7. Pull back the two large tabs (Figure 5, #3) on the floor of the case bottom, while lifting up the back edge of the CD SC drive.

8. Carefully lift the CD SC drive mechanism up and out of the case.

Replace

1. Lower the CD SC drive mechanism into the case, front first. Slide the CD SC drive mechanism forward until the volume and eject control knobs fit into the two holes at the front of the case bottom.

2. Connect the SCSI select switch cable (Figure 5, #1).

3. Connect the audio cable (Figure 5, #2) to the rear audio board.

4. Push down gently on the back of the drive mechanism until the back edge of the metal frame is in place under the two tabs (Figure 5, #3).

5. Connect the SCSI device-to-case cable (Figure 6, #1) to the CD SC drive mechanism and close the end tabs.

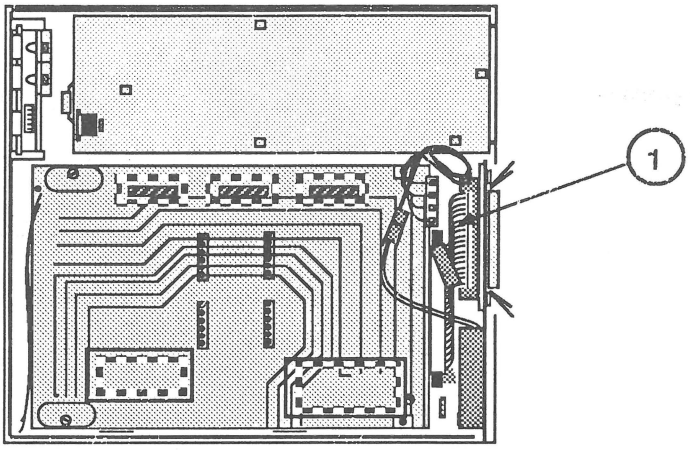

FIGURE 6

6. Replace the power supply.
7. Replace the LED board.
8. Replace the case top.

❑ HEADPHONE BOARD

Materials Required

#2 Phillips screwdriver
Small flatblade screwdriver

Remove

To remove the headphone board:

1. Remove the case top.
2. Remove the power supply.
3. Remove the LED board.
4. Remove the CD SC drive mechanism.

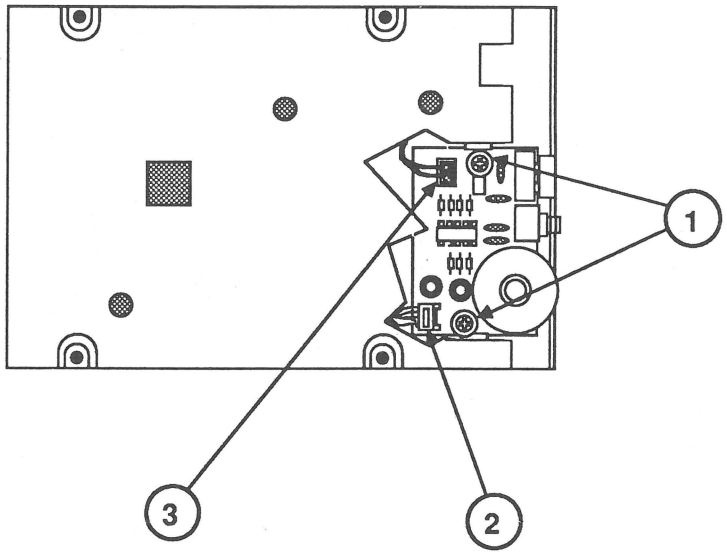

FIGURE 7

5. Remove the two screws (Figure 7, #1) that secure the headphone board to the bottom of the CD SC drive mechanism.
6. Pull the board out slightly from the CD SC drive mechanism and disconnect CNJ653 (Figure 7, #2) from the headphone board.
7. Disconnect CNJ651 (Figure 7, #3) from the headphone board. Remove the headphone board.

Replace

To replace the headphone board:

1. Connect CNJ651 (Figure 7, #3) to the headphone board.
2. Connect CNJ653 (Figure 7, #2) to the headphone board.
3. Slide the headphone board into place and replace the two screws (Figure 7, #1) that secure the headphone board to the CD SC drive mechanism.
4. Replace the CD SC drive mechanism.
5. Replace the LED board.
6. Replace the power supply.
7. Replace the case top.

❑ FAN FRAME

Materials Required

Small flat-blade screwdriver

Remove

To remove the fan frame:

1. Remove the case top.

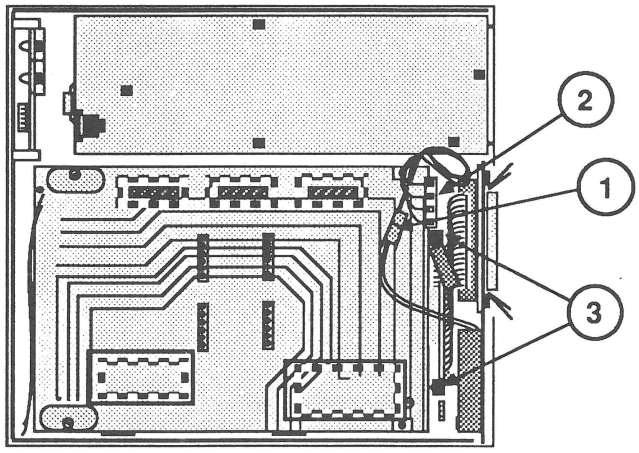

FIGURE 8

2. If a fan is connected to the power supply, disconnect the fan cable by releasing the little holding clip on the connector (Figure 8, #1).

3. Disconnect the power supply cable (Figure 8, #2) from the CD SC drive mechanism.

4. Open the end tabs on the SCSI-device-to-case cable connector (Figure 8, #3) and disconnect the cable from the CD SC drive mechanism.

5. Disconnect the SCSI select switch cable from the SCSI select switch (Figure 9, #1).

6. Disconnect the audio cable (Figure 9, #2) from the rear audio board.

7. Push back the tab (Figure 9, #3) that secures the metal fan frame.

8. Lift out the metal frame (with audio board, SCSI-device-to-case cable, SCSI select switch, and possibly a fan and fan cable attached).

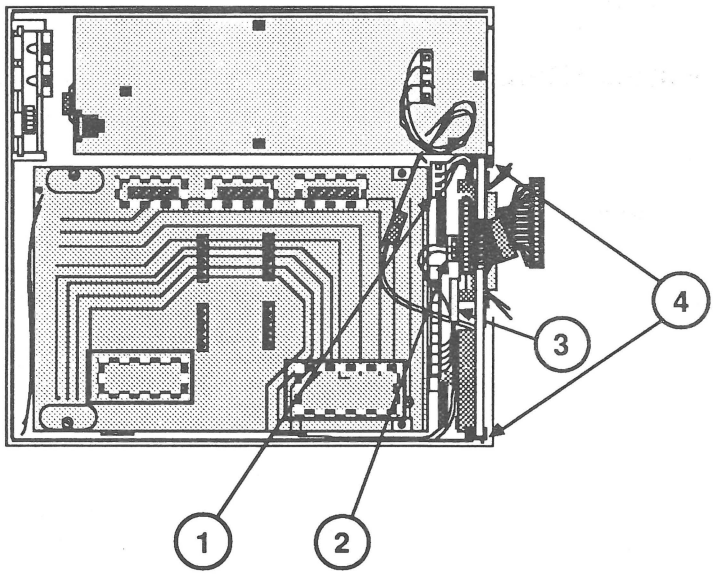

FIGURE 9

Replace

To replace the fan frame:

1. Slide the side edges of the metal fan frame into the **center** slots of the holding tabs located on the inside of the case bottom (Figure 9, #4).

2. Push back the tab (Figure 9, #3) and set the metal fan frame (with audio board, SCSI-device-to-case cable, SCSI select switch, and possibly a fan and fan cable attached) in place.

3. Connect the audio cable (Figure 9, #2) to the audio board.

4. Connect the SCSI select switch cable (Figure 9, #1).

5. Connect the SCSI-device-to-case cable to the CD SC drive mechanism and close the end tabs (Figure 8, #3).

   Note: If the AppleCD SC contains a fan, **do not connect** the fan to the power supply. Use of a fan causes the optical lens to become contaminated by dust and other airborne particles.

6. Connect the power supply cable (Figure 8, #2) to the CD SC drive mechanism.

7. Replace the case top.

❑ FAN

Materials Required

#2 Phillips screwdriver
Small flat-blade screwdriver

Remove

To remove the fan:

1. Remove the case top.

2. Remove the fan frame.

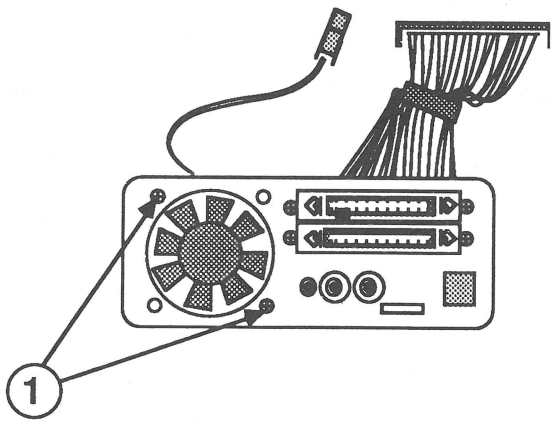

FIGURE 10

3. Remove the two screws (Figure 10, #1) that secure the fan to the frame, and lift the fan free.

Note: Use of a fan in the AppleCD SC causes the optical lens to become contaminated by dust and other airborne particles. It is not necessary to replace the fan. After removing the fan, simply replace the fan frame and the top case.

❑ SCSI-DEVICE-TO-CASE CABLE

Materials Required

#2 Phillips screwdriver
Small flatblade screwdriver

Remove

To remove the SCSI-device-to-case cable:

1. Remove the case top.
2. Remove the fan frame.

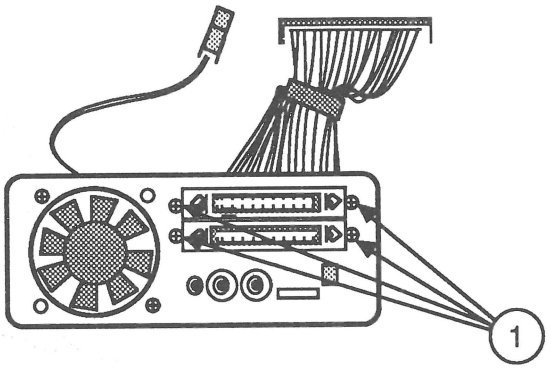

FIGURE 11

3. Remove the four screws (Figure 11, #1) that secure the SCSI cable to the frame and lift the cable free.

Replace

To replace the SCSI-device-to-case cable:

1. Set the cable connectors in place in the appropriate openings in the metal frame.
2. Replace the four screws (Figure 11, #1) that secure the SCSI-device-to-case cable to the metal frame.
3. Replace the fan frame.
4. Replace the case top.

❑ SCSI SELECT SWITCH

Materials Required

Small flatblade screwdriver

Remove

To remove the SCSI select switch:

1. Remove the case top.
2. Remove the fan frame.

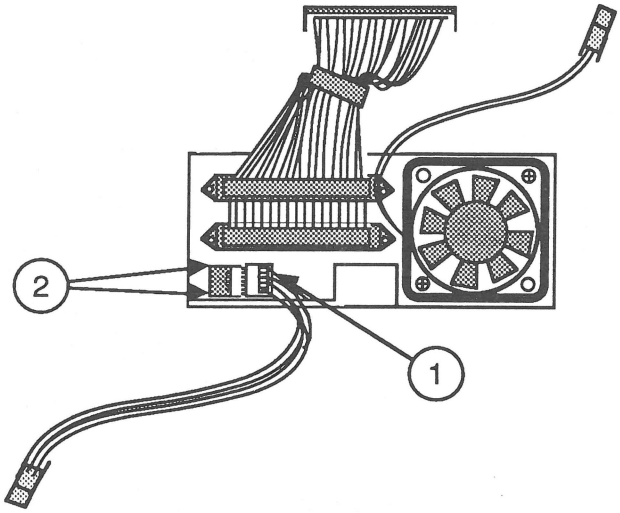

FIGURE 12

3. Disconnect the SCSI select switch cable (Figure 12, #1) from the SCSI select switch.
4. Using your fingers, squeeze down on all four plastic arms on the back of the switch (Figure 12, #2).
5. Holding down the plastic arms, pass the switch from inside to outside through the opening in the metal case.

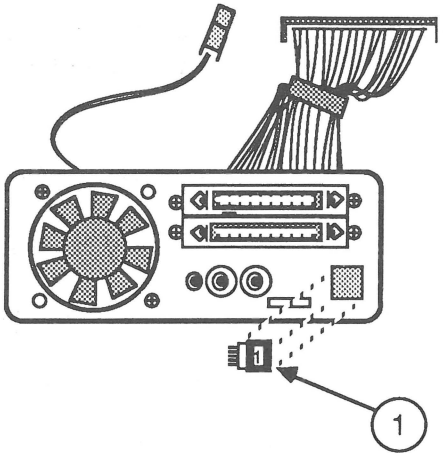

FIGURE 13

Replace

To replace the SCSI select switch:

1. Holding down the four arms of the switch, pass the switch (Figure 13, #1) from outside to inside through the opening in the metal case and release the arms.

2. Connect the SCSI select switch cable (Figure 12, #1) to the SCSI select switch.

3. Replace the fan frame.

4. Replace the case top.

❑ REAR AUDIO BOARD

Materials Required

#2 Phillips screwdriver
Small flatblade screwdriver

Remove

To remove the rear audio board:

1. Remove the case top.
2. Remove the fan frame.
3. Remove the SCSI device-to-case cable.

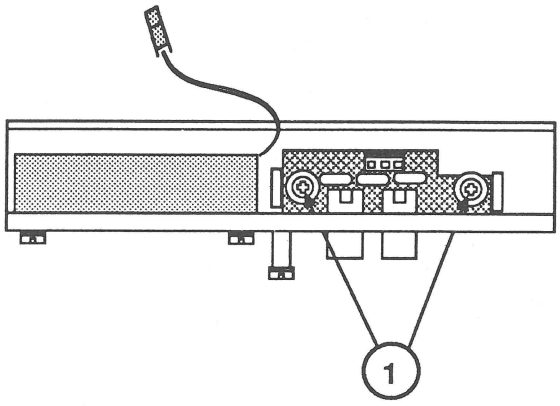

FIGURE 14

4. Remove the two screws (Figure 14, #1) that secure the rear audio board to the fan frame and lift the rear audio board free.

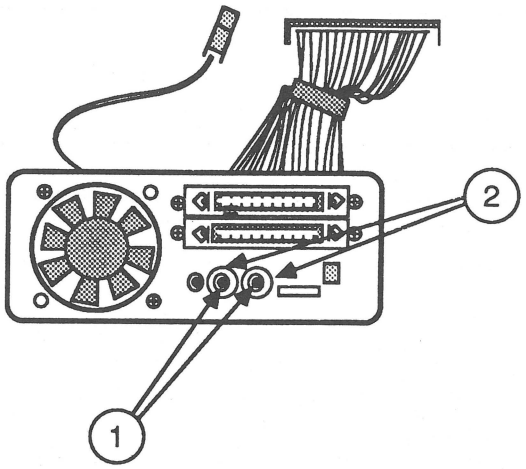

FIGURE 15

Replace

To replace the rear audio board:

1. Position the audio board in the fan frame so that the two audio jacks (Figure 15, #1) project out through the two circular openings (Figure 15, #2) on the fan frame.

2. Replace the two screws (Figure 14, #1) that secure the rear audio board to the fan frame.

3. Replace the SCSI device-to-case cable.

4. Replace the fan frame.

5. Replace the case top.

Apple Technical Procedures

AppleCD SC

Section 3 – Diagnostics

❑ CONTENTS

3.2 Using AppleCD Test
3.2 Materials Required
3.2 Hardware Setup
3.3 Starting AppleCD Test
3.4 The Tests
3.5 Selecting Tests
3.6 Checking the SCSI Configuration
3.6 Running the Tests

❑ USING APPLECD TEST

This section describes how to use the AppleCD Test program to test the AppleCD SC.

Materials Required

Known-good Macintosh Plus, SE, or II computer
SCSI cabling to connect the AppleCD SC to your Macintosh
Macintosh Peripheral Tests diskette
Sony CD-ROM Test Disc
AppleCD SC
A pair of headphones or power-assisted speakers that plug into the headphone jack (you may need an adapter)

Hardware Setup

1. If there are *no* SCSI devices connected to your Macintosh, connect the SCSI cabling from the AppleCD SC to the Macintosh as follows:

   a) Connect a SCSI system cable to the SCSI port on the Macintosh and to one of the SCSI ports on the AppleCD SC.

   b) Connect a SCSI terminator to the other SCSI connector on the AppleCD SC.

2. If there *are* SCSI devices connected to your Macintosh, connect the SCSI cabling from the AppleCD SC to the Macintosh as follows:

   a) Remove the SCSI terminator from the last SCSI device in the chain and connect it to one of the SCSI ports on the AppleCD SC.

   b) Attach a SCSI peripheral cable to the open SCSI port on the AppleCD SC and to the open SCSI port on the last SCSI device in the chain.

3. Set the SCSI ID number of the AppleCD SC by pressing the SCSI select switch on the back panel with a push pin. You may set the SCSI select switch to any number between 0 and 6 that is not already in use by your system. To find out what numbers are already in use, look at the SCSI select switches on the other devices in your system.

   Note: If your computer has an **internal** hard disk, or if an **external** hard disk is connected to your computer, set the AppleCD SC's SCSI ID to a number between 1 and 6. The **internal** hard disk is already preset to SCSI ID 0, and some **external** hard disks are not compatible with AppleCD Test and cause invalid test results when the AppleCD SC is set to SCSI ID 0.

IMPORTANT: *If you change the SCSI ID number, switch the AppleCD SC off and back on, so that the AppleCD SC will start using the new ID number.*

4. Connect a power cord to the AppleCD SC and to a power outlet.

5. Turn on the AppleCD SC.

Starting AppleCD Test

1. Insert the *Macintosh Peripheral Tests* diskette into the Macintosh main drive, and switch on the Macintosh.

2. Insert the *Sony CD-ROM Test Disc* into the AppleCD SC.

   Note: AppleCD Test will not operate with audio or CD-ROM discs. AppleCD Test requires the *Sony CD-ROM Test Disc type 2.0.*

3. Double-click the **Macintosh Peripheral Tests** disk icon.

4. Double-click the **AppleCD Test** icon.

   AppleCD Test is now ready to run tests.

   Note: If the Apple CD-ROM resource file is in the system folder of the startup disk, AppleCD Test will display a problem window. The Apple CD-ROM resource file is supplied with the AppleCD SC and provides for communication between the Macintosh and the AppleCD SC. The Apple CD-ROM resource is not required by AppleCD Test and is not provided on the Macintosh Peripheral Tests disk.

   If AppleCD Test finds the Apple CD-ROM resource file in the System folder, follow the instructions in the problem window before you continue.

The Tests

AppleCD Test provides two tests for the AppleCD SC:

- Main Drive Unit Test
- Audio Test

You can choose to run both tests in sequence, or you can run either test alone. You can also choose to run the selected tests only once, or you can have the tests repeat until a failure occurs or until you stop the test.

Note: You should always run both tests at least once to verify proper AppleCD SC operation.

Drive Mechanism Test

The Main Drive Unit Test checks the internal SCSI bus buffer, runs built-in logic tests, and verifies that the AppleCD SC can read data accurately. After you start this test, you can let it run unattended.

Audio Test

The Audio Test plays music through the headphone jack. AppleCD Test cannot detect the music, however, so you must be present during this test to determine if the test passes or fails. You can use headphones or power-assisted speakers to monitor this test.

The audio test plays music over both channels, then over the left channel, and finally over the right channel. While the music is playing, you should adjust the volume control to verify that it is operating correctly.

Selecting Tests

To select tests:

1. Start up AppleCD Test (see "Starting AppleCD Test").

2. Pull down the **Options** menu and select **Test Selections**.

   AppleCD Test displays the Test Selections window (Figure 1).

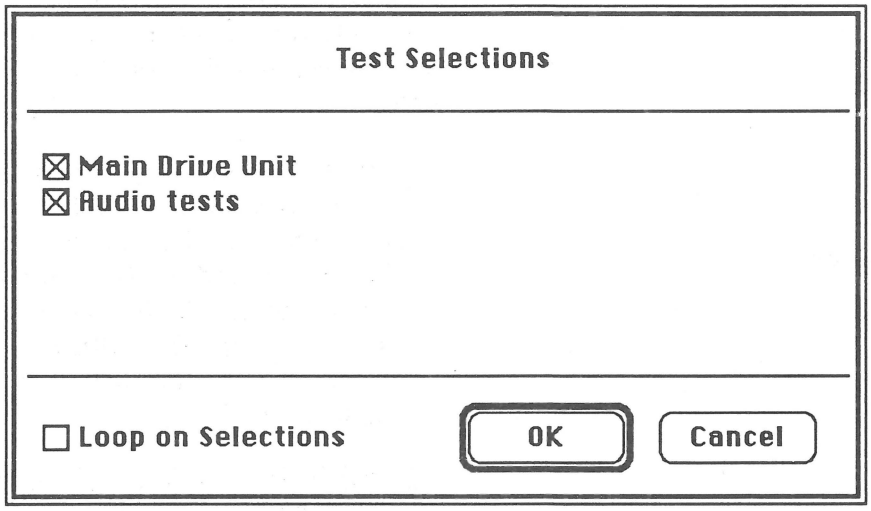

FIGURE 1

3. For each test that you want to run, click in the check box beside the test name until an *X* appears.

4. If you want the tests to repeat until you stop them, click in the check box for **Loop on Selections** until an X appears.

5. Click **OK**.

6. If you want AppleCD Test to remember your test selections, pull down the **File** menu and select **Save Test Selections**.

Checking the SCSI Configuration

AppleCD Test allows you to check the SCSI switch setting on the suspect AppleCD SC.

To check the SCSI switch setting, start AppleCD Test, pull down the **Options** menu, and select **Configuration**. The SCSI switch setting shown in the configuration window should match the setting of the SCSI select switch on the AppleCD SC.

The SCSI ID number may be set to any number between 0 and 6 that is not already in use by your system. To find out what numbers are already in use, look at the SCSI select switches on the other devices in your system.

> ***Note:*** If your computer has an **internal** hard disk, or if an **external** hard disk is connected to your computer, set the AppleCD SC's SCSI ID to a number between 1 and 6. The **internal** hard disk is already preset to SCSI ID 0, and some **external** hard disks are not compatible with AppleCD Test and cause invalid test results when the AppleCD SC is set to SCSI ID 0.

IMPORTANT: *If you change the SCSI ID number, switch the AppleCD SC off and back on, so that the AppleCD SC will start using the new ID number.*

Running the Tests

Click **Start** to run the tests.

AppleCD Test runs all selected tests. If all tests pass, the **Status** line in the AppleCD Test window reports that all tests were completed.

> ***Note:*** If more than one AppleCD SC is connected to the Macintosh running AppleCD Test, the diagnostic will test the AppleCD SC with the largest SCSI ID number. All other devices will not be tested.

If a test fails, the test stops and AppleCD Test displays a problem window. The problem window identifies the suspected problem and provides general repair instructions. For specific assembly and disassembly instructions, see Section 2, Take-Apart. If the instructions on the screen do not correct the problem, see the Symptom Chart description in Section 4, Troubleshooting.

> ***Note:*** Do not eject the test disc while AppleCD Test is running. If you eject the disc, or if AppleCD Test ejects the disk before the tests have been completed, the test has failed. Try to run the test again.

If you suspect an intermittent problem, open the Test Selections window and click in the check box for **Loop on Selections**. Start the tests and let them loop for an hour. If the tests are still running after an hour, the AppleCD SC is probably good.

To stop AppleCD Test, click the **Pause** button in the AppleCD Test window, and then click the **Stop** button.

> ***Note:*** Repeated and persistent clicking of the **Pause** and **Stop** buttons while the test is running may lead to inaccurate test results. If you have clicked the **Pause** or **Stop** button repeatedly, and the test displays the **Improper Setup** or **AppleCD SC Drive Assembly** window, the result may be invalid. Restart the Macintosh system, turn the AppleCD SC off and back on, and rerun the test. If either window appears again, follow the instructions provided by the window.

Apple Technical Procedures

AppleCD SC

Section 4 – Troubleshooting

❑ CONTENTS

4.2 Introduction
4.2 Using the Symptom Chart
4.2 Using the Troubleshooting Flowchart
4.3 Symptom Chart
4.4 Troubleshooting Flowchart

❑ INTRODUCTION

This section provides a symptom chart and a troubleshooting flowchart for the AppleCD SC.

Using the Symptom Chart

To use the symptom chart, first find the symptom that most nearly describes the problem; then perform the first corrective action on the solution list. If that corrective action does not fix the problem, go to the next action. **If you replace a module and find that the problem remains, reinstall the original module before you go on to the next action.**

If the symptoms displayed by the AppleCD SC are not listed on the symptom chart, or if the system is not displaying a clearly defined problem, use the troubleshooting flowchart.

Using the Troubleshooting Flowchart

To use the troubleshooting flowchart, start at the top of the flowchart, answer the questions, and proceed down the chart. When you arrive at a rectangular box containing a list of actions, perform the actions in the sequence listed. Upon completion of each action, test again to see if the action corrects the problem. **If the problem remains, reinstall the original module before you go to the next action.**

The troubleshooting flowchart includes references to notes on the opposite page. These notes provide additional instructions or referrals to other procedures.

❑ SYMPTOM CHART

Problems	Solutions
• *Green power light is NOT on*	1. Exchange LED board. 2. Exchange the power supply. 3. Exchange the CD SC drive mechanism.
• *AppleCD SC will not accept a compact disk*	1. Exchange the disk (it may be dirty or damaged). 2. Exchange the CD SC drive mechanism.
• *Red LED does not light when the caddy is inserted*	1. Exchange the CD SC drive mechanism. 2. Exchange the LED board. 3. Exchange the power supply.
• *Headphone jack does not operate correctly*	1. Exchange the headphone board. 2. Exchange the CD SC drive mechanism. 3. Exchange the power supply.
• *Volume control does not operate correctly*	1. Exchange the headphone board. 2. Exchange the CD SC drive mechanism.
• *Speaker jacks do not operate*	1. Exchange the CD SC drive mechanism. 2. Exchange the rear audio board. 3. Exchange the power supply.
• *Macintosh cannot see AppleCD SC*	1. Exchange the CD SC drive mechanism. 2. Exchange the power supply. 3. Exchange the SCSI-device-to-case cable. 4. Exchange the SCSI ID switch.
• *Eject button does not operate*	1. Run the Eject Button Test (see Troubleshooting Flowchart, later in this section). 2. Exchange the headphone board.

❑ TROUBLESHOOTING FLOWCHART

Notes

1. See Section 3, Diagnostics.

   If the AppleCD Test reports "Improper setup" as the suspected problem, the SCSI ID switch could be the problem. Change the ID number (see Section 3, Diagnostics), switch off the AppleCD SC, and switch it on again. If changing the ID number corrects the problem, either the switch is faulty or the switch was set incorrectly.

2. See Section 2, Take-Apart.

3. If you suspect intermittent problems, set AppleCD Test to loop on the selected tests, and run the tests for one hour. If no failures occur within the hour, the AppleCD SC is operating correctly.

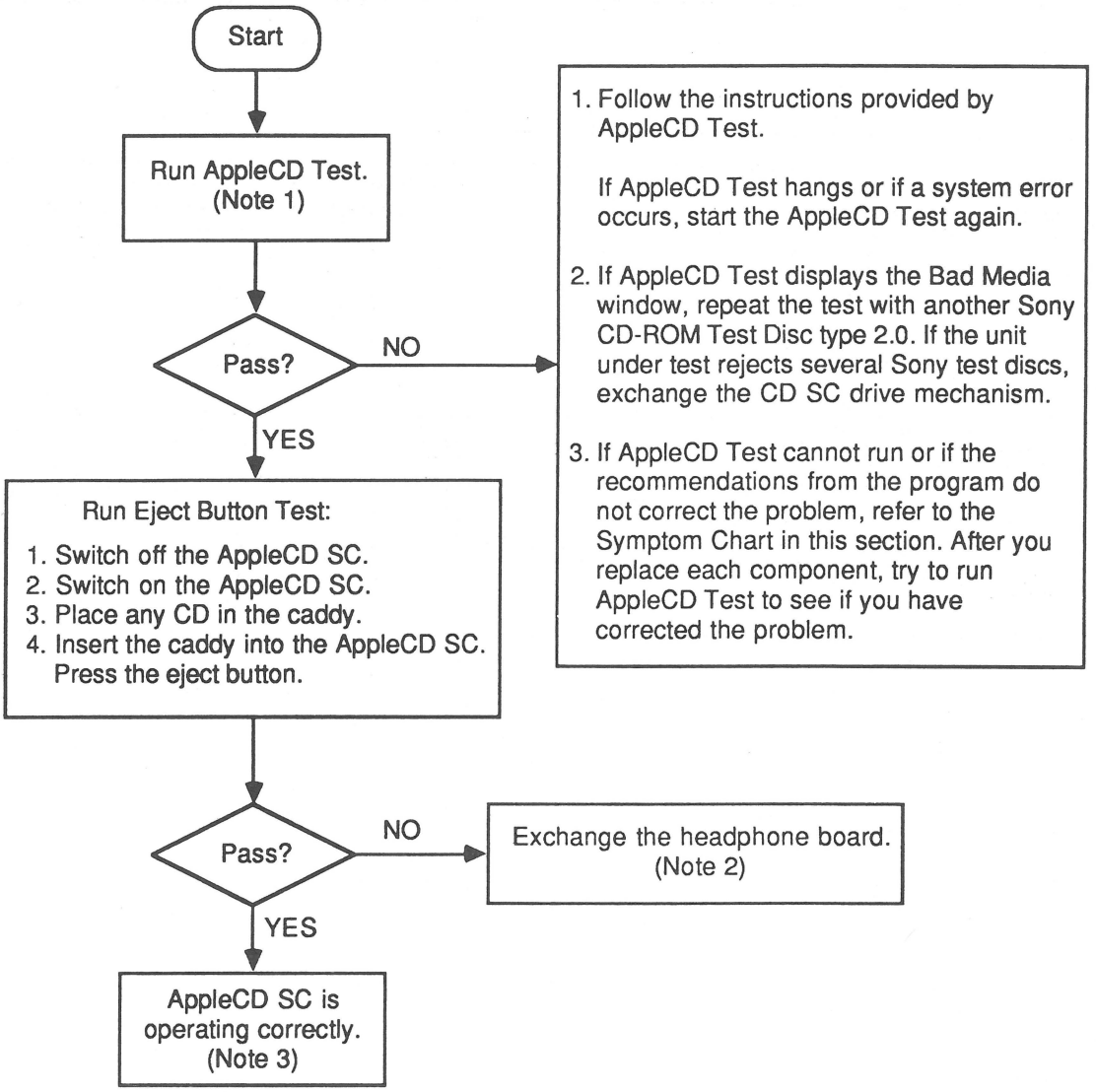
Start
Run AppleCD Test.
(Note 1)
Pass?
NO
YES
1. Follow the instructions provided by AppleCD Test.
If AppleCD Test hangs or if a system error occurs, start the AppleCD Test again.
2. If AppleCD Test displays the Bad Media window, repeat the test with another Sony CD-ROM Test Disc type 2.0. If the unit under test rejects several Sony test discs, exchange the CD SC drive mechanism.
3. If AppleCD Test cannot run or if the recommendations from the program do not correct the problem, refer to the Symptom Chart in this section. After you replace each component, try to run AppleCD Test to see if you have corrected the problem.
Run Eject Button Test:
1. Switch off the AppleCD SC.
2. Switch on the AppleCD SC.
3. Place any CD in the caddy.
4. Insert the caddy into the AppleCD SC. Press the eject button.
Pass?
NO
Exchange the headphone board.
(Note 2)
YES
AppleCD SC is operating correctly.
(Note 3)

AppleCD SC

Section 5 – Additional Procedures

❑ CONTENTS

5.2 Repair Extension Program
5.2 Materials Required
5.2 Introduction
5.2 Procedure

Note: See Section 2, Take-Apart for directions for underlined steps.

❑ REPAIR EXTENSION PROGRAM

Materials Required

Small flat-blade screwdriver
Small Phillips screwdriver
Tape
Known-good drive mechanism
Macintosh Peripheral Tests disk
Sony CD-ROM Test Disc

Introduction

AppleCD SCs with fans are susceptible to optical lens assembly contamination from dust and other airborne particles that are drawn into the unit by the fan. Disconnecting or removing the fan will help prevent the contamination of the optical lens assembly.

Procedure

Follow the steps below to disconnect the fan and to swap the AppleCD SC drive mechanism:

1. Remove the case top.
2. Disconnect the fan cable by releasing the little holding clip on the connector (Figure 1, #1).
3. Tape the power supply end of the fan cable (the small black-and-red cable that emerges from the side of the power supply) to the top of the power supply.
4. Tuck the cable that is still connected to the fan into the empty space in front of the fan.
5. Remove the SC drive mechanism.
6. Replace the SC drive mechanism with the known-good drive.
7. Replace the case top.
8. Test the drive by running the complete *AppleCD Test* program (see "Using AppleCD Test" in Section 3, Diagnostics).

Apple Technical Procedures

AppleCD SC

Illustrated Parts List

CONTENTS

IPL.3 AppleCD SC Drive Mechanism (Figure 1)

The figures and lists in this section include all piece parts that can be purchased separately from Apple for the AppleCD SC, along with their part numbers. These are the only parts available from Apple. Refer to your *Apple Service Programs Manual* for prices.

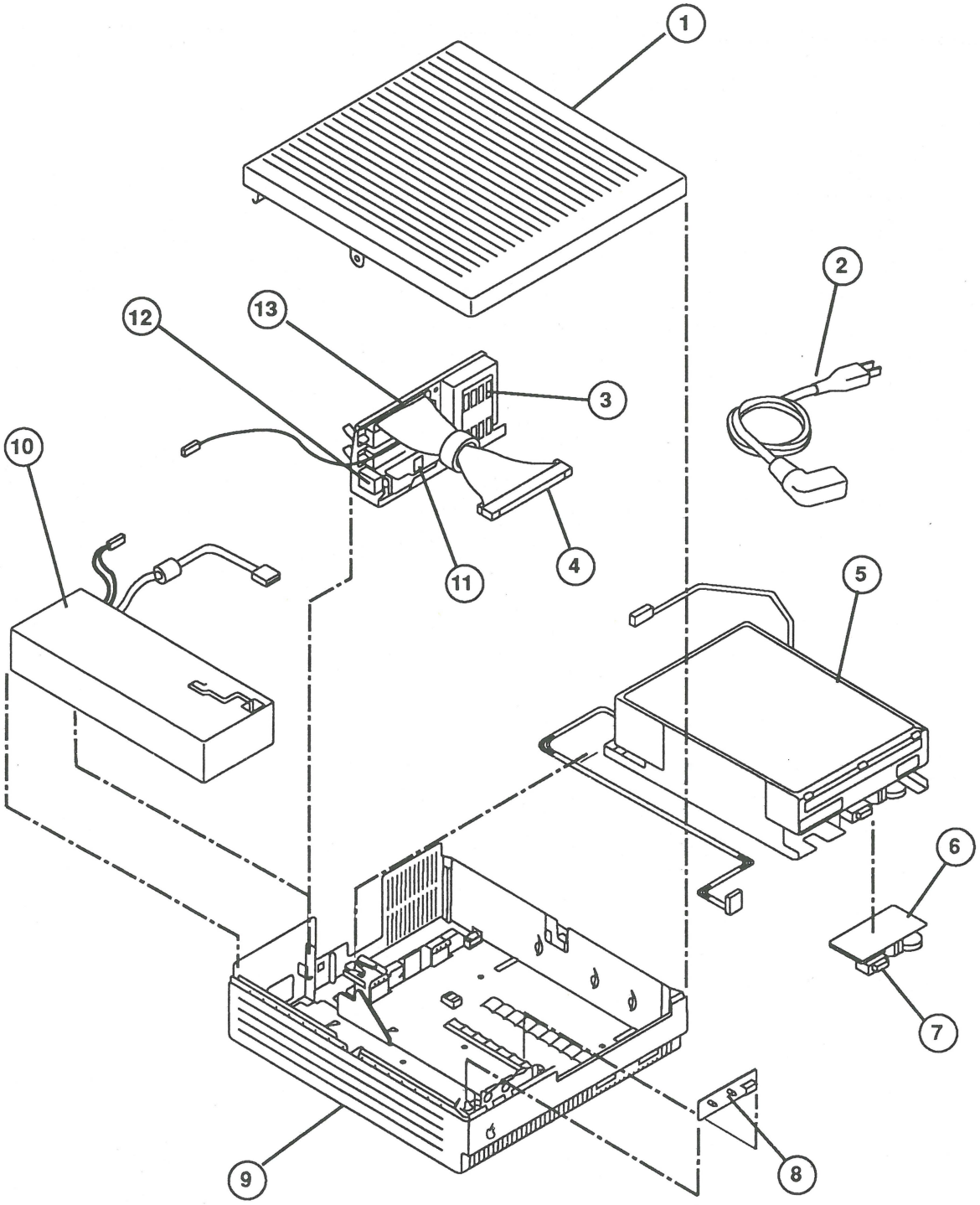

FIGURE 1

❑ APPLE CD SC DRIVE MECHANISM (Figure 1)

Item	Part No.	Description
1	630-5376	Top Case
2	590-0380	Power Cable, Smoke
3	699-0450	Fan
4	590-0235	SCSI-Device-to-Case Cable
5	661-0110	AppleCD SC Drive Mechanism—Required
6	982-0020	Headphone Board
7	956-0021	Eject Button
8	630-4173	LED Board
9	630-5377	Bottom Case
10	661-0343	Power Supply
11	630-4166	Rear Audio Board
12	705-0045	Switch, SCSI Select Assembly
13	805-0382	Fan Frame